CITY OF MANTECA

SAN JOAQUIN COUNTY CALIFORNIA

TRAFFIC SIGNAL AND IN–ROADWAY WARNING LIGHTS
FOR
WOODWARD AVENUE

GENERAL NOTES

1. THE CONTRACTOR SHALL FURNISH ALL MATERIALS AND SHALL PERFORM ALL LABOR IN ACCORDANCE WITH THE REQUIREMENTS OF THE STATE OF CALIFORNIA DEPARTMENT OF TRANSPORTATION STANDARD SPECIFICATIONS AND STANDARD PLANS, DATED JULY 2002.

2. IT SHALL BE THE RESPONSIBILITY OF THE CONTRACTOR TO VERIFY THE EXISTENCE AND LOCATION OF ALL UNDERGROUND FACILITIES, PUBLIC OR PRIVATE, AND TO PROTECT THEM FROM DAMAGE. THE CONTRACTOR SHALL BEAR THE TOTAL EXPENSE OF REPAIR OR REPLACEMENT OF ANY UNDERGROUND FACILITIES DAMAGED BY HIS OPERATIONS. QUANTITY AND EXACT LOCATIONS OF ALL UTILITIES TO BE DETERMINED BY CONTRACTOR 48 HOURS BEFORE BEGINNING WORK. PHONE USA (800) 227–2600 PRIOR TO DIGGING.

3. THESE PLANS ACCURATE FOR ELECTRICAL WORK ONLY.

4. CONTRACTOR IS RESPONSIBLE FOR TRAFFIC CONTROL. TRAFFIC CONTROL MEASURES SHALL CONFORM TO THE STATE STANDARD PLANS AND THE LATEST EDITION OF THE MUTCD 2003 CALIFORNIA SUPPLEMENT.

5. ALL PULL BOXES ARE TO BE NO. 5 UNLESS OTHERWISE NOTED ON PLAN.

6. POSITIONING OF SIGNAL STANDARDS, PULL BOXES, AND DETECTORS SHALL BE VERIFIED BY CITY OF MANTECA PRIOR TO INSTALLATION.

7. LOOP DETECTORS SHALL BE CENTERED IN EFFECTIVE LANE WIDTHS UNLESS OTHERWISE NOTED ON PLAN OR AS DIRECTED AND APPROVED BY THE ENGINEER.

8. THE CONTRACTOR SHALL PROVIDE AND INSTALL ALL EQUIPMENT AND MATERIALS NECESSARY FOR THE SIGNAL TO OPERATE AS SHOWN IN THE PHASE DIAGRAM.

9. SIDEWALKS REMOVED FOR INSTALLATION OF CURB RAMPS, SIGNAL FOUNDATIONS, AND/OR PULL BOXES SHALL BE REMOVED TO THE NEAREST SCORE MARK. SCORE MARK SHALL BE SAWCUT PRIOR TO REMOVAL.

10. CONTRACTOR SHALL CONTACT PG&E TO CONFIRM POWER SUPPLY LOCATION AND VOLTAGE PRIOR TO START OF WORK.

11. ALL SALVAGED MATERIAL SHALL BE DELIVERED TO:

CITY OF MANTECA
CORPORATION YARD
210 E. WETMORE STREET
MANTECA, CA 95337

12. CONTRACTOR SHALL NOTIFY THE CITY'S PUBLIC WORKS DEPARTMENT (ENGINEERING DIVISION) TWO WORKING DAYS BEFORE START OF WORK.

13. THE CONTRACTOR SHALL NOT PROCEED WITH ANY WORK CALLED FOR ON THESE PLANS UNTIL THE CITY ENGINEER'S SIGNATURE OF APPROVAL IS AFFIXED HEREON AND ALL APPLICABLE PERMITS HAVE BEEN OBTAINED. AN APPROVED SET OF PLANS SHALL BE ON THE JOB SITE DURING ANY CONSTRUCTION.

14. THE CONTRACTOR SHALL BE RESPONSIBLE FOR REPORTING ALL CONFLICTS, ERRORS, OMISSIONS, ETC. TO THE ENGINEER IMMEDIATELY UPON DISCOVERY. IF SO DIRECTED BY THE ENGINEER, THE CONTRACTOR SHALL STOP WORK UNTIL REMEDIAL ACTION CAN BE TAKEN. ANY COSTS RESULTING FROM THE CONTRACTOR'S FAILURE TO REPORT OR FAILURE TO STOP WORK AS DIRECTED WILL BE THE RESPONSIBILITY OF THE CONTRACTOR.

15. THE CONTRACTOR AGREES THAT HE SHALL ASSUME SOLE AND COMPLETE RESPONSIBILITY FOR JOB SITE CONDITIONS DURING THE COURSE OF CONSTRUCTION OF THIS PROJECT, INCLUDING SAFETY OF ALL PERSONS AND PROPERTY; THAT THIS REQUIREMENT SHALL APPLY CONTINUOUSLY AND NOT BE LIMITED TO NORMAL WORKING HOURS; AND THAT THE CONTRACTOR SHALL DEFEND, INDEMNIFY AND HOLD THE OWNER AND ENGINEER HARMLESS FROM ANY AND ALL LIABILITY, REAL OR ALLEGED IN CONNECTION WITH THE PERFORMANCE OF WORK ON THIS PROJECT, EXCEPTING FOR LIABILITY ARISING FROM THE SOLE NEGLIGENCE OF THE OWNER OR ENGINEER.

16. THE CONTRACTOR SHALL MAKE AN ON–SITE INSPECTION PRIOR TO PROVIDING ANY PROPOSALS TO DETERMINE ANY AND ALL ITEMS NOT SHOWN AS BID ITEMS ON THE PROPOSAL SHEETS, BUT WHICH MAY BE NECESSARY TO PERFORM A COMPLETE AND ACCEPTABLE JOB.

17. OMNI–MEANS, LTD. WILL NOT BE RESPONSIBLE FOR OR LIABLE FOR ANY UNAUTHORIZED CHANGES TO OR USES OF THESE PLANS. ALL CHANGES TO THESE PLANS SHALL BE IN WRITING AND MUST BE APPROVED BY THE CITY ENGINEER.

18. THESE PLANS ACCOMPANIED BY SEPARATE SET OF SPECIAL PROVISIONS.

19. ALL VEHICLE SIGNAL SECTION HOUSINGS, VISORS, AND BACKPLATES SHALL BE METAL. ALL VEHICLE SIGNAL SECTIONS SHALL BE 12" IN DIAMETER.

20. ALL VEHICLE AND PEDESTRIAN SIGNAL INDICATIONS SHALL BE L.E.D. DISPLAY.

PREPARED FOR: CITY OF MANTECA

PREPARED BY: OMNI–MEANS ENGINEERS AND PLANNERS
3530 W. MINERAL KING AVENUE, SUITE A
VISALIA, CALIFORNIA 93291

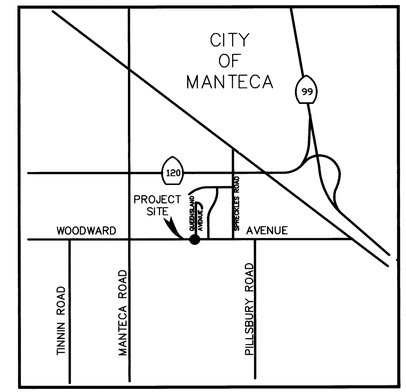

LOCATION MAP
N.T.S.

INDEX OF SHEETS

SHEET	TITLE
1	TITLE SHEET
2	WOODWARD AVE & QUEENSLAND AVE TRAFFIC SIGNAL
3	WOODWARD AVE & WELLINGTON AVE IN–ROADWAY WARNING LIGHTS
4	TRAFFIC SIGNAL DETAILS

APPROVED
CITY ENGINEER
DATE

CA: 1–800–642–2444
CALL BEFORE YOU DIG
USA
UNDERGROUND SERVICE ALERT
NV: 1–800–227–2600

REGISTERED PROFESSIONAL ENGINEER
JOSEPH W. WELLINGTON
No. C53755
Exp. 06–30–07
CIVIL
STATE OF CALIFORNIA

REVISIONS

No.	DESCRIPTION	DATE	BY

☐ PRELIMINARY ☐ APPROVED ☐ BID ☐ CONSTRUCTION ☐ RECORD

omni • means
ENGINEERS PLANNERS
VISALIA
3530 W Mineral King Ave
Suite A, CA 93291
(559) 734–5895
With offices in:
SACRAMENTO
WALNUT CREEK
REDDING

TITLE SHEET/GENERAL NOTES
WOODWARD AVENUE PROJECT
MANTECA, CA

SCALE	NONE
JOB NO.	55–4570–04
DESIGNED	PJM
DRAWN	PJM
FILE	979e01.DWG
CHECKED	LMW
DATE	7–19–06

SHEET No.
T1
1 OF 4

CONDUCTOR SCHEDULE

AWG	CIRCUIT	RUNS 1	2	3	4	5	6	7	8	9
#14	ø1 SIGNALS	3	3	3	3	6	6	3	3	3
	ø2 SIGNALS	3	3	3	3	3	3			
	ø5 SIGNALS				3	6	6			
	ø6 SIGNALS					6	6	3	3	3
	ø7 SIGNALS		3	3	3	6	6	3	3	
	ø8 SIGNALS			3	3	6	6	3	3	
	ø2 PED	2	2	2	2	2	2			
	ø6 PED					4	4	2	2	2
	ø7 PED		2	2	2	4	4	2	2	
	ø8 PED			2	2	4	4	2		
	ø2 PPB		1	1	1	1	1			
	ø6 PPB					1	1	1	1	
	ø7 PPB	1	1	1	1	2	2	1	1	1
	ø8 PPB				1	2	2			
	PPB NEUTRAL	1	1	1	1	2	2	1	1	1
	P E U					3		3		
	SPARES	3	3	3	3	6	6	3	3	3
	TOTAL	13	19	24	28	64	61	27	22	13
#8	SIGNAL COMMON	1	1	1	1	2	2	1	1	1
#8	LIGHTING		2	2	2	4		2		
EVD	OPTICOM CABLE		1	1	2	4	4	2	1	1
SIC	INTERCONNECT									
DLC	ø1 DETECTORS						1			
	ø2 DETECTORS	4	4	4	4	4	4			
	ø5 DETECTORS	1	1	1	1	1	1			
	ø6 DETECTORS						4			
	ø7 DETECTORS					2	2	2	2	
	ø8 DETECTORS			4	4	4	4			
	TOTAL	5	5	9	9	11	16	2	2	–
MINIMUM CONDUIT SIZE		2"	3"	3"	3"	2–3"	2–3"	3"	3"	2"
PERCENT FILL		21%	14%	19%	21%	19%	20%	14%	10%	13%

4–SECTION HEAD CONFIGURATION

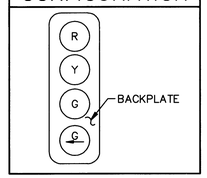

TRAFFIC LOGGING SYSTEM ASSIGNMENTS

DETECTOR	DIRECTION	TLS CHANNEL
2I2U	EB	1
2I2L	EB	2
6J2U	WB	5
6J2L	WB	6
7J9L	SB	3
8J6U	NB	7
8J6L	NB	8

POLE AND EQUIPMENT SCHEDULE

STANDARD LOC	STANDARD TYPE	MAST ARM SIG	MAST ARM LUM	VEHICLE SIGNAL MAST ARM	VEHICLE SIGNAL POLE	PEDESTRIAN SIGNAL ø	PEDESTRIAN SIGNAL MTG	PEDESTRIAN SIGNAL PPB ø	HPSV LUMINAIRE	SNS (G7–1)	COMMENTS
A	27–4–129	40'	–	MAS MAS	SV–1–T	6	SP–1–T	7 ←	–	Queensland Ave	INSTALL G7–1 SIGN, R73–3(CA) SIGN, AND EVC DETECTOR
B	1–A	–	–	–	TV–2–T	7	SP–1–T	6 →	–	–	
C	17–3–129	20'	12'	MAS–4B	SV–1–T	8	SP–1–T	6 ←	250W	Woodward Ave	INSTALL G7–1 SIGN, R3–4 SIGN, AND EVD DETECTOR
D	1–A	–	–	–	TV–2–T	6	SP–1–T	8 →	–	–	
E	29–5–129	50'	15'	MAS MAS	SV–1–T	2	SP–1–T	8 ←	250W	Queensland Ave	INSTALL G7–1 SIGN, R73–3(CA) SIGN, AND EVA DETECTOR
F	1–A	–	–	–	TV–2–T	8	SP–1–T	2 →	–	–	
G	24–3–129	35'	12'	MAS–4B	SV–1–T	7	SP–1–T	2 ←	250W	Woodward Ave	INSTALL G7–1 SIGN, R3–4 SIGN, AND EVB DETECTOR
H	1–A	–	–	–	TV–2–T	2	SP–1–T	7 →	–	–	

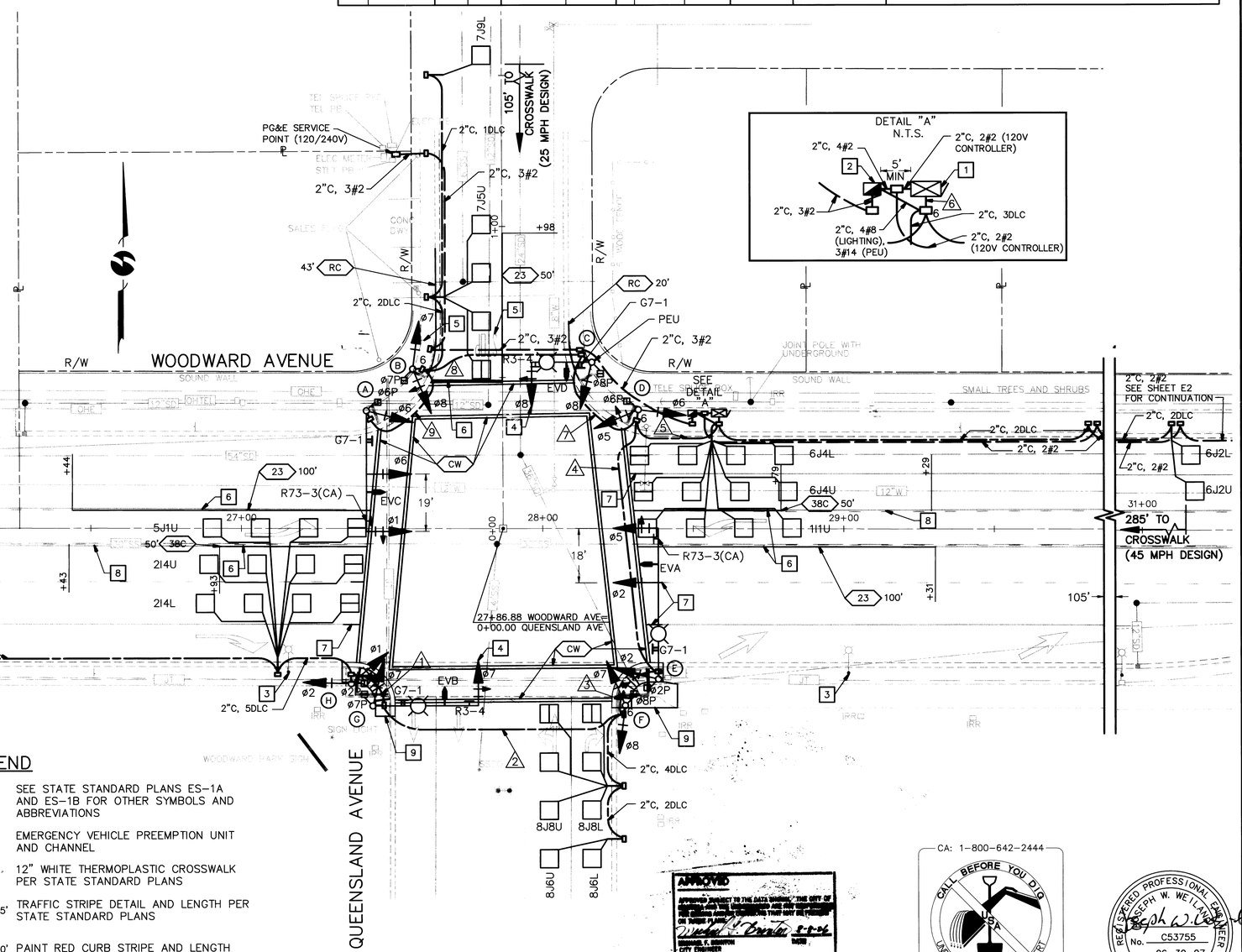

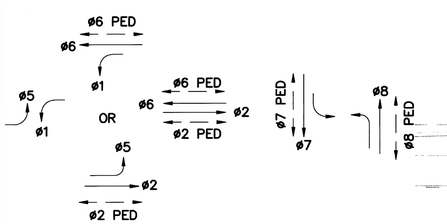

PHASE DIAGRAM

EMERGENCY VEHICLE PREEMPTION

EVA = ø2 + ø5
EVB = ø7
EVC = ø6 + ø1
EVD = ø8

CONSTRUCTION NOTES (THIS SHEET ONLY)

1. FURNISH AND INSTALL MODEL 332 CABINET AND TYPE 170E CONTROLLER ASSEMBLY. FRONT OF CONTROLLER SHALL FACE EAST.
2. FURNISH AND INSTALL TYPE III–AF SERVICE EQUIPMENT ENCLOSURE PER STATE STANDARD PLANS ES–2C AND ES–2D. PROVIDE ITEMS 1–8, 10, 15–17, AND 20–25. ITEM 24 TO BE USED WITH IN–ROADWAY WARNING LIGHTS WITH A CIRCUIT BREAKER RATING OF 20 AMPS.
3. REMOVE AND SALVAGE EXISTING STREET LIGHT AND ABANDON FOUNDATION. MAINTAIN EXISTING STREET LIGHTING CIRCUIT. COORDINATE WITH THE CITY OF MANTECA.
4. FURNISH AND INSTALL 4–SECTION SIGNAL HEAD, SEE DETAIL ON THIS SHEET.
5. REMOVE EXISTING STOP MARKING AND REMOVE AND SALVAGE EXISTING STOP SIGN WHEN SIGNAL IS TURNED ON.
6. REMOVE EXISTING STRIPING IN CONFLICT WITH PROPOSED.
7. EXTEND STRIPING TO CROSSWALK, MATCH EXISTING DETAIL AND TYPE.
8. REMOVE EXISTING TRAFFIC DETAIL.
9. RECONSTRUCT EXISTING CURB RAMP AND SIDEWALK PER CITY STANDARD DRAWINGS ST–6, ST–7, AND ST–12.

LEGEND

NOTE: SEE STATE STANDARD PLANS ES–1A AND ES–1B FOR OTHER SYMBOLS AND ABBREVIATIONS

EVA — EMERGENCY VEHICLE PREEMPTION UNIT AND CHANNEL

CW — 12" WHITE THERMOPLASTIC CROSSWALK PER STATE STANDARD PLANS

23 75' — TRAFFIC STRIPE DETAIL AND LENGTH PER STATE STANDARD PLANS

RC 20' — PAINT RED CURB STRIPE AND LENGTH

APPROVED
APPROVED SUBJECT TO THE DATA SHOWN, THE CITY OF MANTECA ASSUMES NO RESPONSIBILITY FOR THE ACCURACY OF THE DESIGN DATA, ENGINEERING THAT MAY BE SHOWN ON THESE PLANS.
Michael K. Brandt 8-8-06
MICHAEL K. BRANDT
CITY ENGINEER
DATE

CA: 1-800-642-2444
CALL BEFORE YOU DIG
UNDERGROUND SERVICE ALERT
NV: 1-800-227-2600

REGISTERED PROFESSIONAL ENGINEER
JOSEPH W. WEITLAUF
No. C53755
Exp. 06-30-07
CIVIL
STATE OF CALIFORNIA

REVISIONS

No.	DESCRIPTION	DATE	BY

☐ PRELIMINARY ☐ APPROVED ☐ BID ☐ CONSTRUCTION ☐ RECORD

omni·means
ENGINEERS PLANNERS
VISALIA 3530 W Mineral King Ave Suite A, CA 93291 (559) 734-5895
With offices in: SACRAMENTO, WALNUT CREEK, REDDING

WOODWARD AVE & QUEENSLAND AVE
TRAFFIC SIGNAL
WOODWARD AVENUE PROJECT
MANTECA, CA

SCALE	1"=20'
JOB NO.	55–4570–04
DESIGNED	PJM
DRAWN	PJM
FILE	979e01.DWG
CHECKED	LMW
DATE	7–19–06

SHEET No. E1

2 OF 4

CONSTRUCTION NOTES (THIS SHEET ONLY)

1. FURNISH AND INSTALL IN-ROADWAY WARNING LIGHTS (LED TYPE) AND MOUNTING BASES PER THE SPECIAL PROVISIONS AND MANUFACTURER'S INSTRUCTIONS.
2. FURNISH AND INSTALL ONE 1-A SIGNAL STANDARD (11' HEIGHT), IN-ROADWAY WARNING LIGHTS' CONTROLLER AND NEMA 4 ENCLOSURE, W11-2 AND W16-7P SIGNS, AN ADA PEDESTRIAN PUSH BUTTON ASSEMBLY WITH R62E(CA) SIGN AND MOUNTING HARDWARE.
3. FURNISH AND INSTALL ONE 1-A SIGNAL STANDARD (11' HEIGHT), W11-2 AND W16-7P SIGNS, AN ADA PEDESTRIAN PUSH BUTTON ASSEMBLY WITH R62E(CA) SIGN AND MOUNTING HARDWARE.
4. FURNISH AND INSTALL A W11-2 SIGN AND POST.
5. REMOVE EXISTING STRIPING IN CONFLICT WITH PROPOSED.
6. EXTEND STRIPING TO CROSSWALK, MATCH EXISTING DETAIL AND TYPE.
7. REMOVE EXISTING TRAFFIC DETAIL.
8. RECONSTRUCT EXISTING CURB RAMP PER CITY STANDARD DRAWING ST-13.
9. INSTALL THERMOPLASTIC PAVEMENT MARKINGS, WORD AS SHOWN, PER STATE STANDARD PLANS.
10. INSTALL 2"C, 2#2 (120V CONTROLLER), 1-3#14 PPB CABLE, AND 2-2#10 LIGHTING CABLES.
11. INSTALL 2"C, 1-3#14 PPB CABLE, AND 2-2#10 LIGHTING CABLES.
12. INSTALL 1-3#14 PPB CABLE AND 1-2#10 LIGHTING CABLE (SAW CUT).
13. INSTALL 2"C, 1-3#14 PPB CABLE.
14. CURB TERMINATION DETAIL, SEE STATE STANDARD PLAN ES-5E.
15. INSTALL 1-3#14 PPB CABLE (SAW CUT).
16. INSTALL 1-2#10 LIGHTING CABLE (SAW CUT).

LEGEND

CW — 12" WHITE THERMOPLASTIC CROSSWALK PER STATE STANDARD PLANS

23 — 50' TRAFFIC STRIPE DETAIL AND LENGTH PER STATE STANDARD PLANS

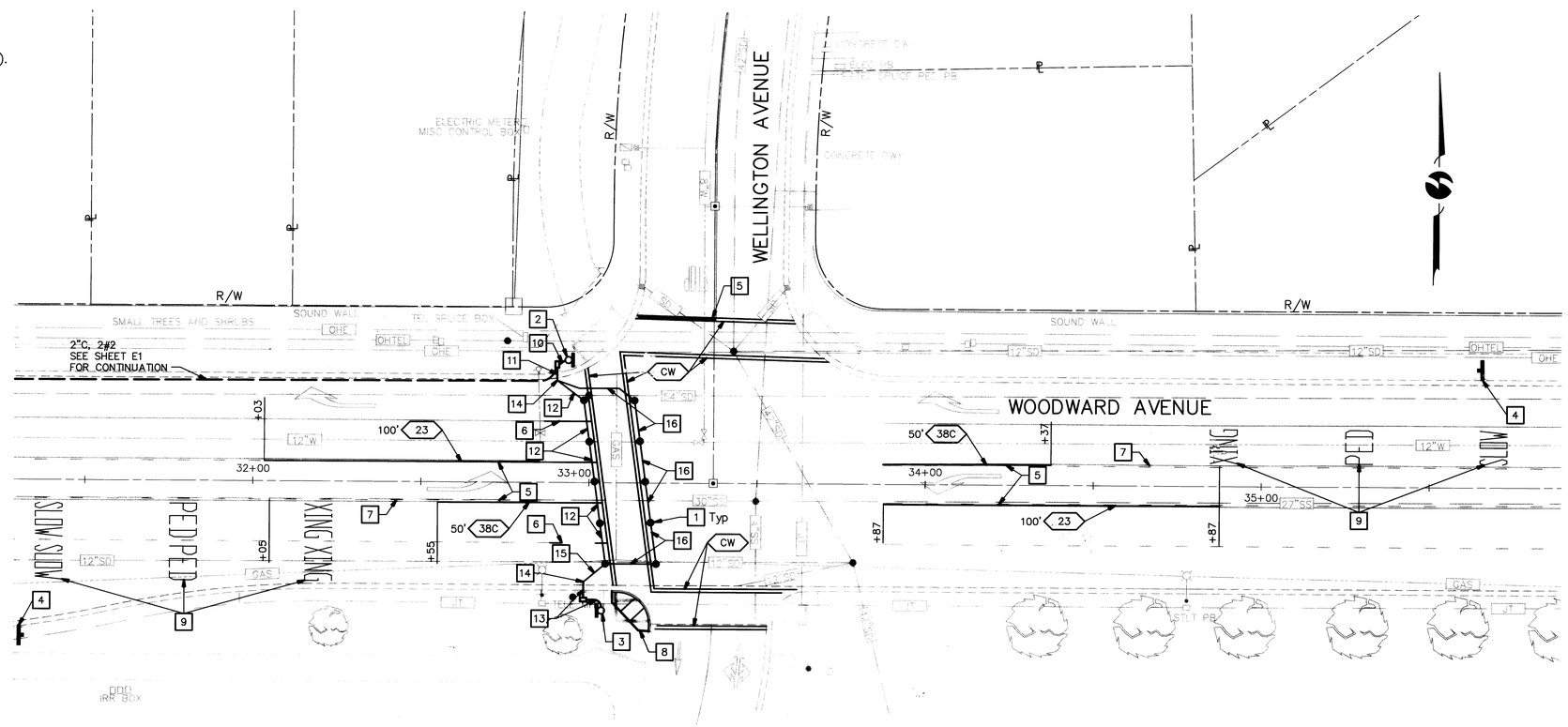

APPROVED SUBJECT TO THE DATA SHOWN. THE CITY OF MANTECA HAS NOT REVIEWED THE ACCURACY OF THE DATA SHOWN ON THESE PLANS.
8-8-06

CA: 1-800-642-2444
CALL BEFORE YOU DIG
USA
UNDERGROUND SERVICE ALERT
NV: 1-800-227-2600

REGISTERED PROFESSIONAL ENGINEER
JOSEPH W. WEITLAUF
No. C53755
Exp. 06-30-07
CIVIL
STATE OF CALIFORNIA

REVISIONS			
No.	DESCRIPTION	DATE	BY

☐ PRELIMINARY
☐ APPROVED
☐ BID
☐ CONSTRUCTION
☐ RECORD

omni·means
ENGINEERS PLANNERS
VISALIA
3200 W Mineral King Ave
Suite K
Visalia, CA 93291
(559) 734-5895
With offices in:
WALNUT CREEK
REDDING

WOODWARD AVE & WELLINGTON AVE
IN-ROADWAY WARNING LIGHTS
WOODWARD AVENUE PROJECT
MANTECA, CA

SCALE	1"=20'
JOB NO.	55-4570-04
DESIGNED	PJM
DRAWN	PJM
FILE	979e01.DWG
CHECKED	LMW
DATE	7-19-06

SHEET No.
E2
3 OF 4

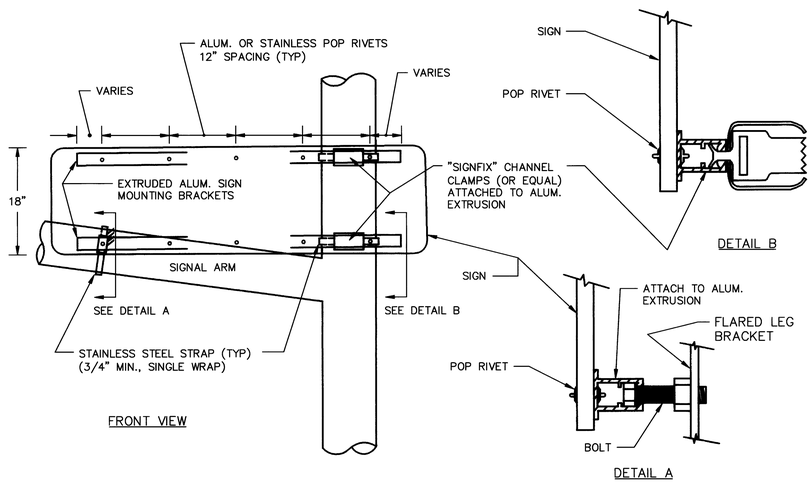

TRAFFIC SIGNAL STREET NAME SIGN MOUNTING DETAIL
N.T.S.

NOTES

1. ALL MATERIAL FURNISHED SHALL BE RUST RESISTANT. ALL SIGN HARDWARE SHALL BE ALUMINUM AND ANY MOVING PARTS MUST BE MADE OF STAINLESS STEEL TO PREVENT RUSTING.

2. THE SIGN MOUNTING EXTRUDED ALUMINUM MOUNTING BRACKETS SHALL BE EITHER MEDIUM ALUMINUM EXTRUSIONS (SIGNFIX PART NO. HPN–053) OR LARGER ALUMINUM EXTRUSIONS (SIGNFIX PART NO. HPN–055). EXTRUDED ALUMINUM MOUNTING BRACKETS MUST BE BY SIGNFIX OR MUST BE DIRECTLY ADAPTABLE TO UNIVERSAL SIGNFIX CHANNEL CLAMPS E.P. (PART NO. HPN–034EP) OR EQUAL. FLARED LEG MOUNTING BRACKET FOR MOUNTING TO POLE OR MAST ARM SHALL BE HAWKINS PART NO. M2G–FUB OR APPROVED EQUAL. THREADED PORTION OF BRACKET SHALL ACCEPT COURSE THREAD 5/16–INCH ALL–THREAD BOLT.

3. SINGLE STREET NAME SIGN SHALL HAVE NAME AND SUFFIX CENTERED IN SIGN. SIGNS SHALL BE SINGLE FACE AND FABRICATED ON ALUMINUM BLANKS 0.063–INCH THICKNESS. BLANK SHALL BE 18–INCHES IN WIDTH AND VARY IN LENGTH DEPENDING ON THE NUMBER OF LETTERS OF THE STREET (MIN. OF 6–FEET IN LENGTH). SIGN BLANK SHALL HAVE GREEN BACKGROUND USING 3M DIAMOND GRADE REFLECTIVE VINYL SHEETING. UPPER CASE LETTERS SHALL BE 10–INCHES AND LOWER CASE LETTERS SHALL BE 7.5–INCHES. ALL LETTERS SHALL BE HIGHWAY FONT "D". SIGN SHALL HAVE 1–INCH WHITE BORDER COVERING THE ENTIRE EDGE OF SIGN BLANK. CORNERS SHALL BE NEATLY ROUNDED TO A 3–INCH RADIUS. WORDS SHALL BE SPACED 10–INCHES APART AND THERE SHALL BE 10–INCHES OF SPACING BETWEEN BORDER AND SIDES OF STREET NAME. LETTERS SHALL BE SPACED A MIN. OF 1.5–INCHES.

4. ALL SIGNS SHALL BE APPROVED FOR CONFORMANCE BY THE CITY TRAFFIC DEVICES STAFF PRIOR TO INSTALLATION.

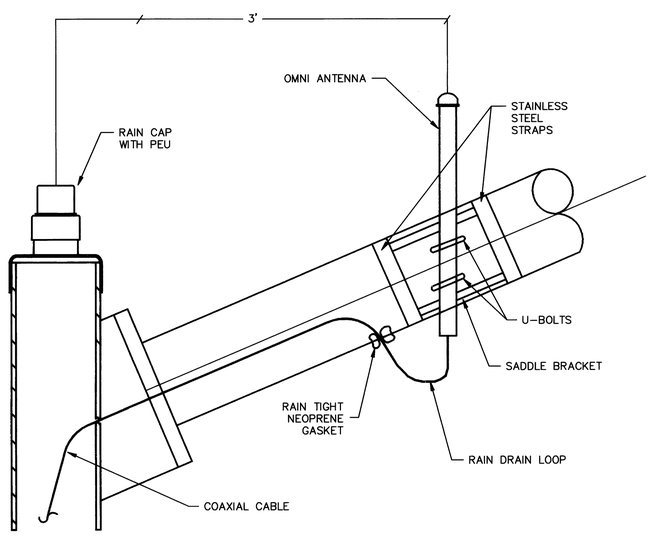

ANTENNA MOUNTING DETAIL
N.T.S.

NOTES

1. PROVIDE ONE CABLE FOR EACH ANTENNAE MOUNTED ON LUMINAIRE ARM.

2. ASSEMBLY WITHOUT ANTENNAE SHALL BE HOT–DIP GALVANIZED PRIOR TO FABRICATION.

3. CONTRACTOR SHALL SUBMIT SHOP DRAWING BEFORE FABRICATING.

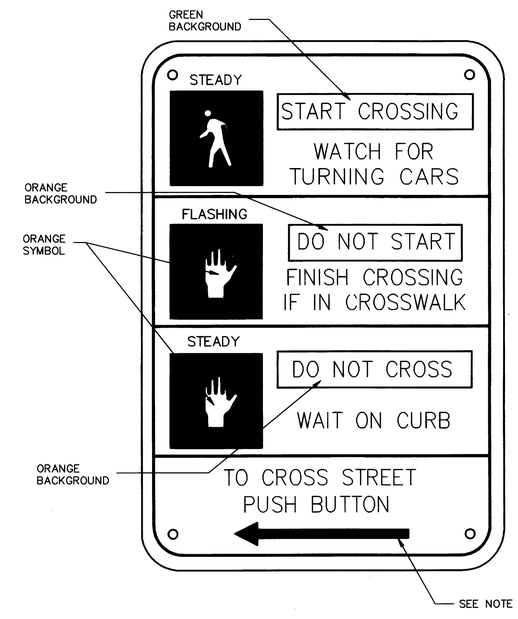

PEDESTRIAN PUSH BUTTON SIGN DETAIL
N.T.S.

NOTES

1. SEE POLE SCHEDULES FOR ARROW ORIENTATIONS.

2. BACKGROUND SHALL BE WHITE WITH BLACK TEXT AND LINES, EXCEPT WHERE NOTED OTHERWISE.

3. OVERALL SIGN DIMENSIONS AND INSTALLATION SHALL CONFORM TO STATE STANDARDS FOR PEDESTRIAN PUSH BUTTONS. SEE STATE STANDARD PLAN ES–5C.

APPROVED

CITY ENGINEER DATE

CA: 1–800–642–2444
CALL BEFORE YOU DIG
USA
UNDERGROUND SERVICE ALERT
NV: 1–800–227–2600

REGISTERED PROFESSIONAL ENGINEER
JOSEPH W. WELLMAN
No. C53755
Exp. 06–30–07
CIVIL
STATE OF CALIFORNIA

REVISIONS

No.	DESCRIPTION	DATE	BY

☐ PRELIMINARY ☐ APPROVED ☐ BID ☐ CONSTRUCTION ☐ RECORD

omni • means
ENGINEERS PLANNERS
VISALIA 3530 W Mineral King Ave (559) 734–5895
SACRAMENTO 3000 K St. Ste. 7 Davis, CA 95616
WALNUT CREEK Valello, CA 93291
REDDING

TRAFFIC SIGNAL DETAILS
WOODWARD AVENUE PROJECT
MANTECA, CA

SCALE	NONE
JOB NO.	55–4570–04
DESIGNED	PJM
DRAWN	PJM
FILE	979e01.DWG
CHECKED	LMW
DATE	7–19–06

SHEET No.
E3
4 OF 4