PRIOR TO ISSUING A BUILDING PERMIT, THE CITY OF MANTECA BUILDING INSPECTION DEPARTMENT SHALL RECEIVE WRITTEN CONFORMATION FROM THE CITY ENGINEER AND FIRE CHIEF STATING THAT ALL STREETS WITHIN THE DEVELOPMENT MEET "ALL WEATHER ROAD" STANDARDS.

TO BE CONSIDERED AN "ALL WEATHER ROAD" THE FOLLOWING CRITERIA SHALL BE MET:

1. A SOILS REPORT, PREPARED BY A SOILS ENGINEER, SHALL BE SUBMITTED TO THE CITY ENGINEER. THE REPORT SHALL INCLUDE THE FOLLOWING INFORMATION:
   A) SOIL CLASSIFICATION BY UNIFIED SOIL CLASSIFICATION SYSTEM
   B) R-VALUES
   C) DENSITY CURVES SHOWING MAXIMUM DRY DENSITY AND OPTIMUM MOISTURE CONTENT
   D) LOG OF SOIL BORINGS
   E) AN EVALUATION, BY THE SOILS ENGINEER, STATING MINIMUM REQUIREMENTS FOR THE NATIVE SOIL TO FUNCTION AS AN "ALL WEATHER ROAD"

2. ALL CURB, GUTTER AND SIDEWALK SHALL BE INSTALLED IN ACCORDANCE WITH PROJECT PLANS AND SPECIFICATIONS.

3. ALL TRENCHES IN THE ROAD AREA SHALL BE FILLED AND COMPACTED TO CITY STANDARDS. TRENCHING IN AN APPROVED "ALL WEATHER ROAD" SURFACE WITHOUT WRITTEN AUTHORIZATION FROM THE CITY ENGINEER SHALL BE CAUSE FOR ISSUANCE OF A STOP WORK NOTICE BY THE BUILDING INSPECTION DEPARTMENT.

4. FIRE HYDRANTS AND WATER SYSTEMS SHALL BE PRESSURE TESTED, BACTERIOLOGICAL TESTED AND APPROVED. BLANK PLATES AND JUMPERS SHALL BE REMOVED TO PROVIDE AN APPROVED WATER SUPPLY CAPABLE OF SUPPLYING REQUIRED FIRE FLOW FOR FIRE PROTECTION TO ALL PREMISES UPON WHICH BUILDINGS OR PORTIONS OF BUILDINGS ARE HEREAFTER CONSTRUCTED, IN ACCORDANCE WITH THE CURRENT "UNIFORM FIRE CODE".

5. SEWER AND STORM DRAIN SYSTEM SHALL BE INSTALLED, TESTED AND APPROVED.

6. ALL UTILITIES SHALL HAVE A MINIMUM OF THIRTY INCHES OF COVER.

7. PRIOR TO ACCEPTANCE OF SUBDIVISION ROADS AS "ALL WEATHER ROADS" THEY SHALL BE INSPECTED AND APPROVED BY THE CITY ENGINEER AND FIRE CHIEF.

THE CITY ENGINEER OR FIRE CHIEF SHALL HAVE AUTHORITY TO TERMINATE CONSTRUCTION AT ANY TIME IF ANY OF THE AFOREMENTIONED CONDITIONS ARE VIOLATED.

| NO. | REVISED | BY | | |
|---|---|---|---|---|
| | | | **ALL WEATHER ROADS** | APPROVED BY: M. Brinton DIRECTOR OF PUBLIC WORKS |
| DRAWN BY: J. BOND | | | | |
| CHECKED BY: J. PODESTA | | | CITY OF MANTECA DEPARTMENT OF PUBLIC WORKS | DRAWING NO. ST-1 |
| SCALE: NONE | | | | DATE: JAN. 1988 |

PRINTED ON DIEPO NO 1000H CLEARPRINT

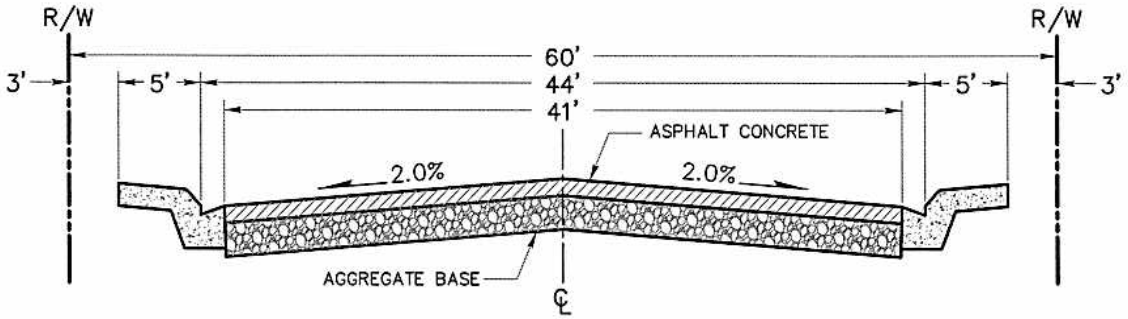


## SMALL COLLECTOR STREET

60' RIGHT-OF-WAY WITH DRIVE-OVER OR VERTICAL CURB

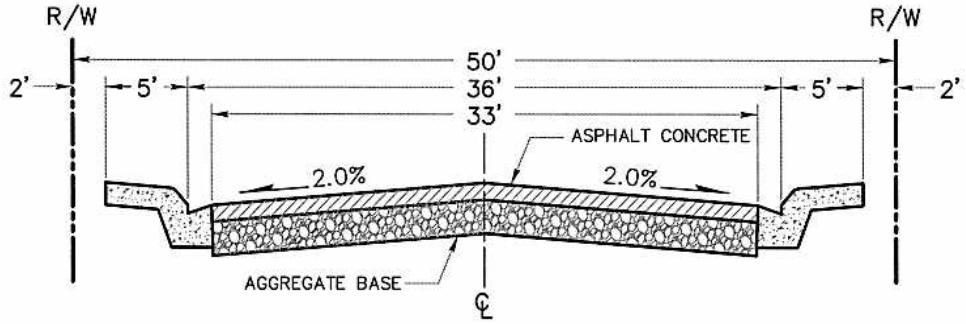


## RESIDENTIAL STREET

50' RIGHT-OF-WAY WITH DRIVE-OVER OR VERTICAL CURB

## NOTES:

1. CROSS SLOPE SHALL BE 2% ON NEWLY CONSTRUCTED STREETS.
2. WHEN MATCHING EXISTING PAVEMENT CROSS SLOPES SHALL BE 2% IN TRAFFIC LANES AND SHALL NOT EXCEED 5% IN SHOULDER AREA OR 3% AT INTERSECTIONS.
3. PAVEMENT STRUCTURAL DESIGN SHALL BE BASED UPON, "THE FLEXIBLE PAVEMENT STRUCTURAL SECTION DESIGN GUIDE FOR CALIFORNIA CITIES AND COUNTIES", AS MODIFIED BY CITY RESOLUTION NO. 5633.

| NO. | REVISED | BY |
|---|---|---|
| 1 | AUGUST, 2004 | JP |

DRAWN BY: J. HULSEY
CHECKED BY: J. PODESTA
SCALE: NOT TO SCALE

**STANDARD STREET CROSS SECTIONS**

CITY OF MANTECA
DEPARTMENT OF PUBLIC WORKS

APPROVED BY: Michael V. Braxton
DIRECTOR OF PUBLIC WORKS

DRAWING NO. **ST-2**
DATE: AUG., 2004

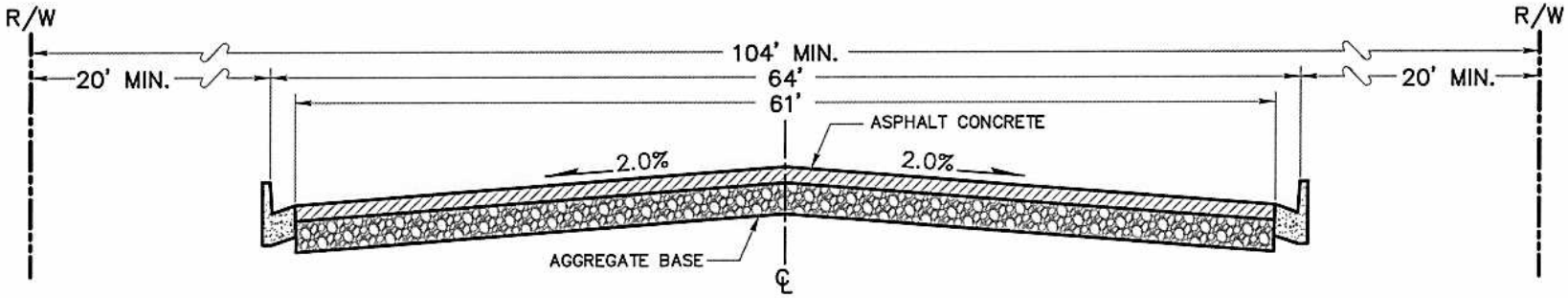


## ARTERIAL STREET

104' MIN. RIGHT-OF-WAY WITH VERTICAL CURB

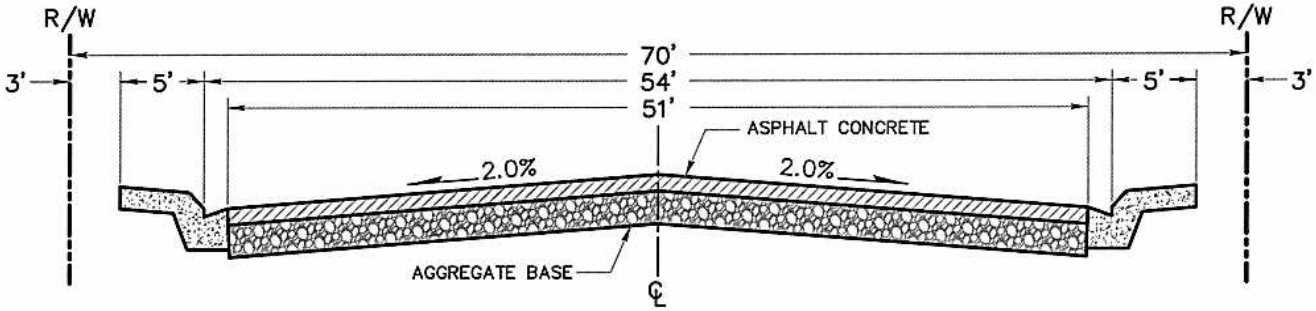


## LARGE COLLECTOR STREET

70' RIGHT-OF-WAY WITH DRIVE-OVER OR VERTICAL CURB

## NOTES:

1. CROSS SLOPE SHALL BE 2% ON NEWLY CONSTRUCTED STREETS.
2. WHEN MATCHING EXISTING PAVEMENT CROSS SLOPES SHALL BE 2% IN TRAFFIC LANES AND SHALL NOT EXCEED 5% IN SHOULDER AREA OR 3% AT INTERSECTIONS.
3. PAVEMENT STRUCTURAL DESIGN SHALL BE BASED UPON, "THE FLEXIBLE PAVEMENT STRUCTURAL SECTION DESIGN GUIDE FOR CALIFORNIA CITIES AND COUNTIES", AS MODIFIED BY CITY RESOLUTION NO. 5633.
4. ARTERIAL STREETSCAPE FOR 104' MINIMUM RIGHT-OF-WAY SHALL BE IN COMPLIANCE WITH CITY STANDARD PLANS DRAWING NO. ST-37 OR ST-38.

| NO. | REVISED | BY |
|---|---|---|
| 1 | AUGUST, 2004 | JP |

DRAWN BY: J. HULSEY
CHECKED BY: J. PODESTA
SCALE: NOT TO SCALE

**STANDARD STREET CROSS SECTIONS**

CITY OF MANTECA
DEPARTMENT OF PUBLIC WORKS

APPROVED BY: Michael F. Brinton
DIRECTOR OF PUBLIC WORKS

DRAWING NO.
DATE: AUG., 2004

**ST-3**

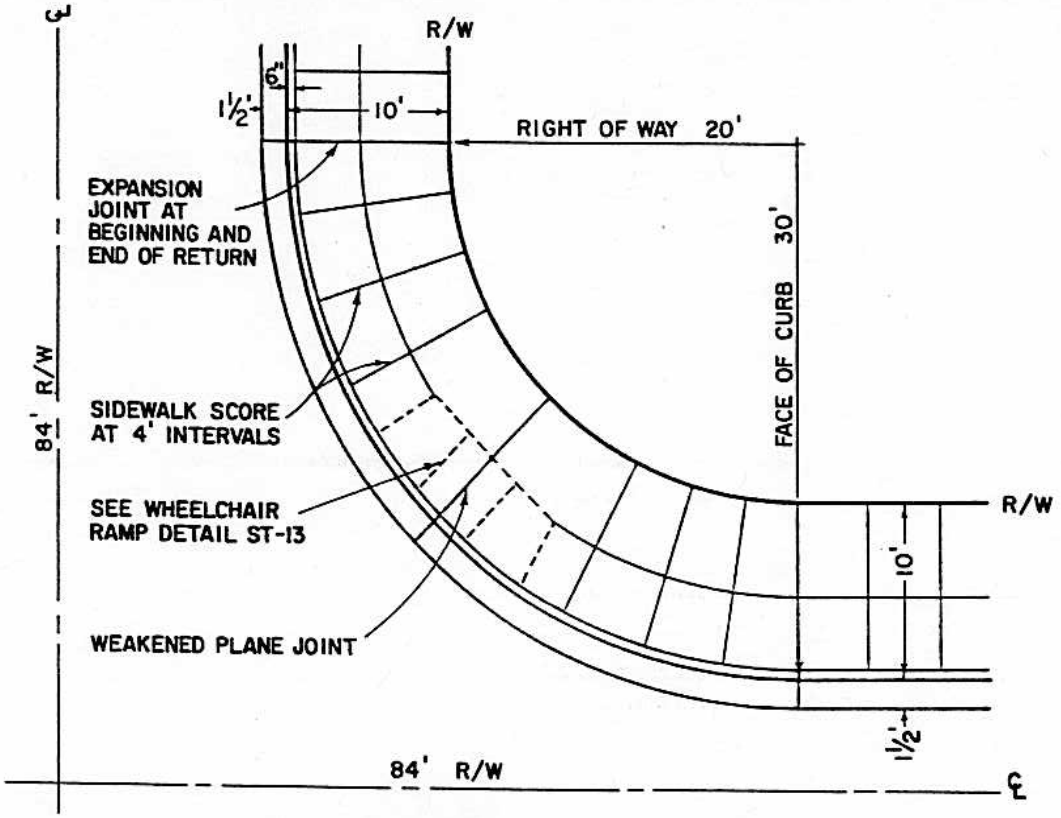


FIGURE 1

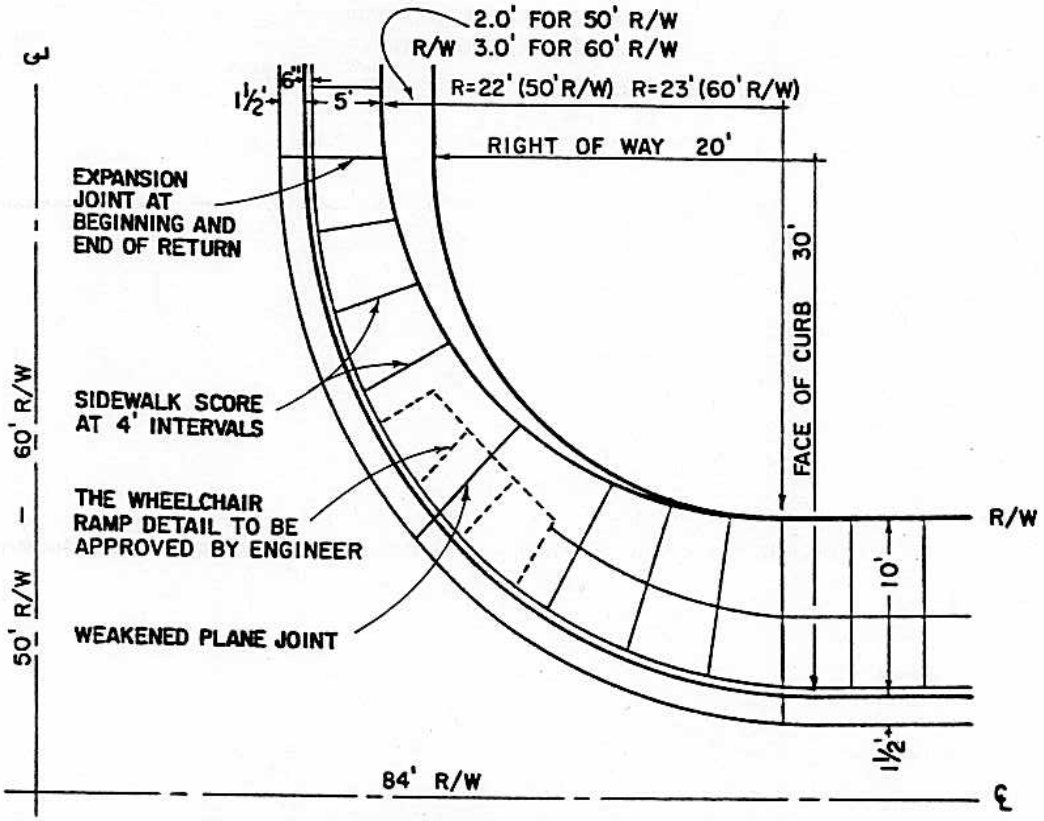


FIGURE 2

| NO. | REVISED | BY | CURB RADIUS GEOMETRICS FOR NEW CONSTRUCTION | APPROVED BY: M.A. Brinton DIRECTOR OF PUBLIC WORKS |
|---|---|---|---|---|
| DRAWN BY: J. KOESTER | | | | |
| CHECKED BY: J. PODESTA | | | CITY OF MANTECA DEPARTMENT OF PUBLIC WORKS | DRAWING NO. ST-4 |
| SCALE: NONE | | | | DATE: JAN. 1988 |

PRINTED ON DIEPO NO 1000H CLEARPRINT

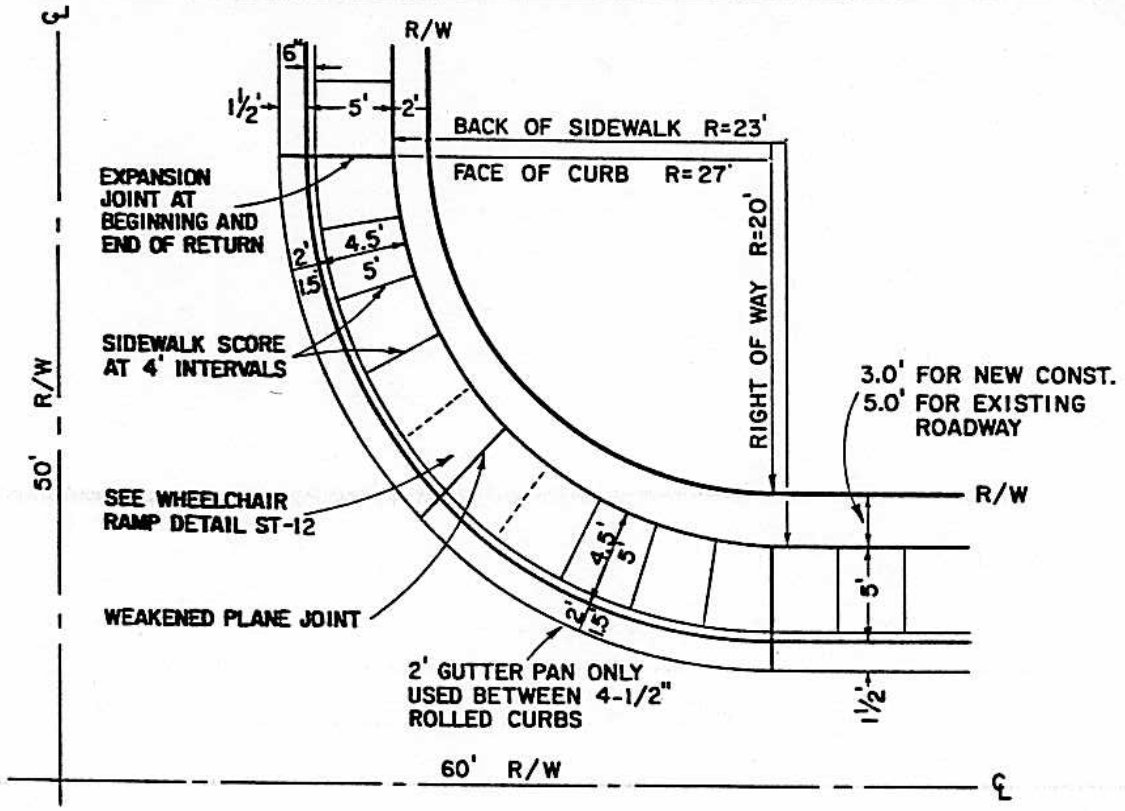


FIGURE 3

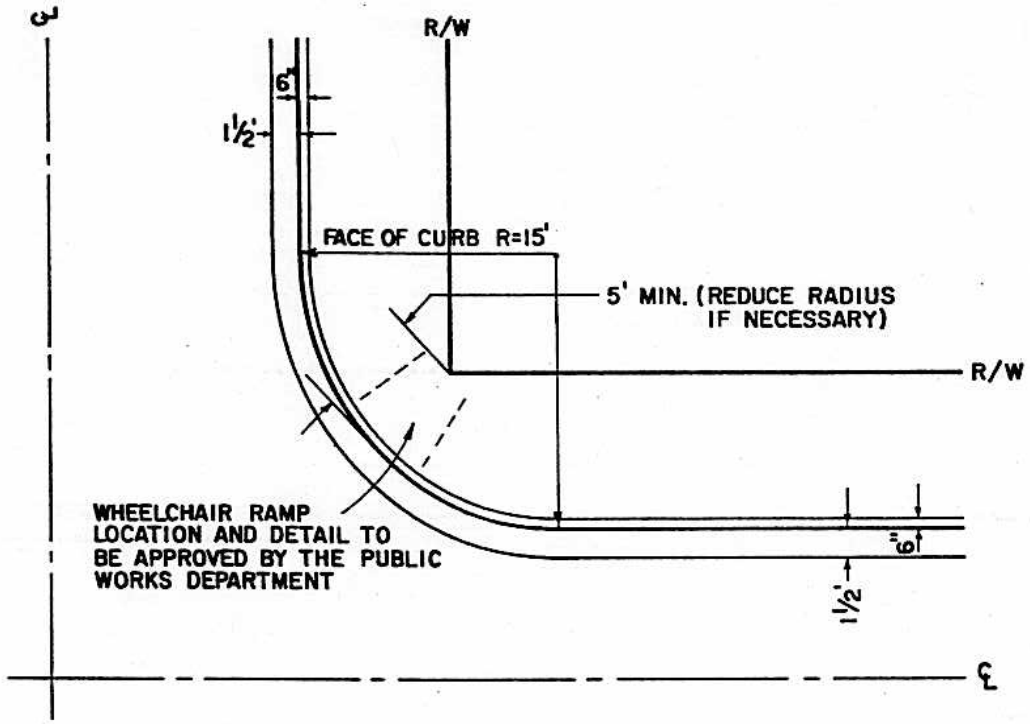


FIGURE 4

| NO. | REVISED | BY | CURB RADIUS GEOMETRICS FOR EXISTING ROADWAYS | APPROVED BY: M A Brinton DIRECTOR OF PUBLIC WORKS |
|---|---|---|---|---|
| | | | | |
| DRAWN BY: J. KOESTER | | | | |
| CHECKED BY: J. PODESTA | | | CITY OF MANTECA DEPARTMENT OF PUBLIC WORKS | DRAWING NO. ST-5 |
| SCALE: NONE | | | | DATE: JAN. 1988 |

PRINTED ON DIEPO NO 1000H CLEARPRINT

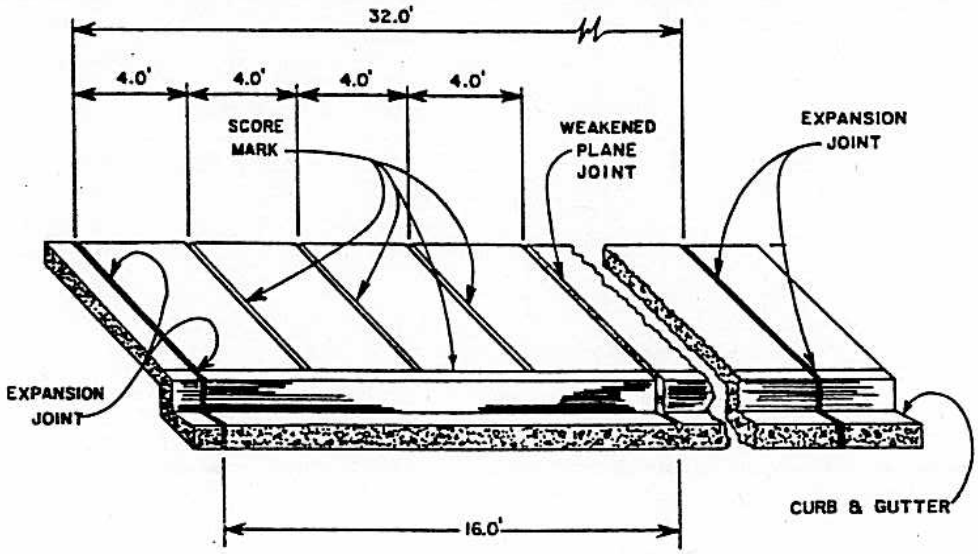


5' WIDE SIDEWALK

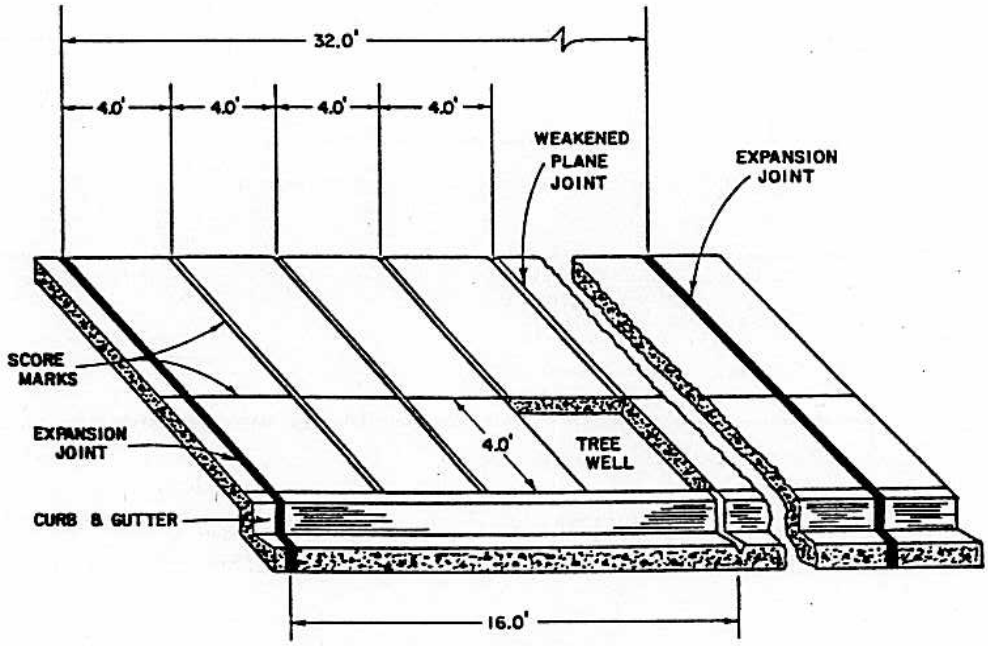


10' WIDE SIDEWALK

**NOTES:**

1. WEAKENED PLANE - 1/4" WIDE x 1-1/4" DEEP SHALL BE PLACED MIDWAY BETWEEN EXPANSION JOINTS, 32'-0" ON CENTER.
2. EXPANSION JOINTS - MATERIAL SHALL BE 1/2" EXPANSION PAPER TO BE PLACED 1/4" BELOW GRADE EVERY 32'-0" ON CENTER AT RADIUS RETURNS, EACH SIDE OF DRIVEWAYS, EACH SIDE OF TREE WELLS AND AROUND WOOD POLES.
3. SCORE MARKS - 1/8" x 1/4" DEEP SHALL BE MADE EVERY 4'-0" ON CENTER. FOR SIDEWALKS 10' IN WIDTH AND A LONGITUDINAL SCORE MARK SHALL BE PLACED 54" FROM THE FACE OF CURB.
4. IF CURB, GUTTER AND SIDEWALK ARE NOT POURED MONOLITHICALLY, SEGMENTS SHALL BE KEYED AS SHOWN ON DRAWING ST-7, ST-8 AND ST-10.

| NO. | REVISED | BY |
|---|---|---|
| 1 | JAN. 1988 | JK |

DRAWN BY: A. MENOR

CHECKED BY: J. PODESTA

SCALE: NONE

# SIDEWALK DETAILS

CITY OF MANTECA
DEPARTMENT OF PUBLIC WORKS

APPROVED BY:
M. Brinton
DIRECTOR OF PUBLIC WORKS

DRAWING NO. ST-6

DATE: JAN. 1988

PRINTED ON DIEPO NO 1000H CLEARPRINT

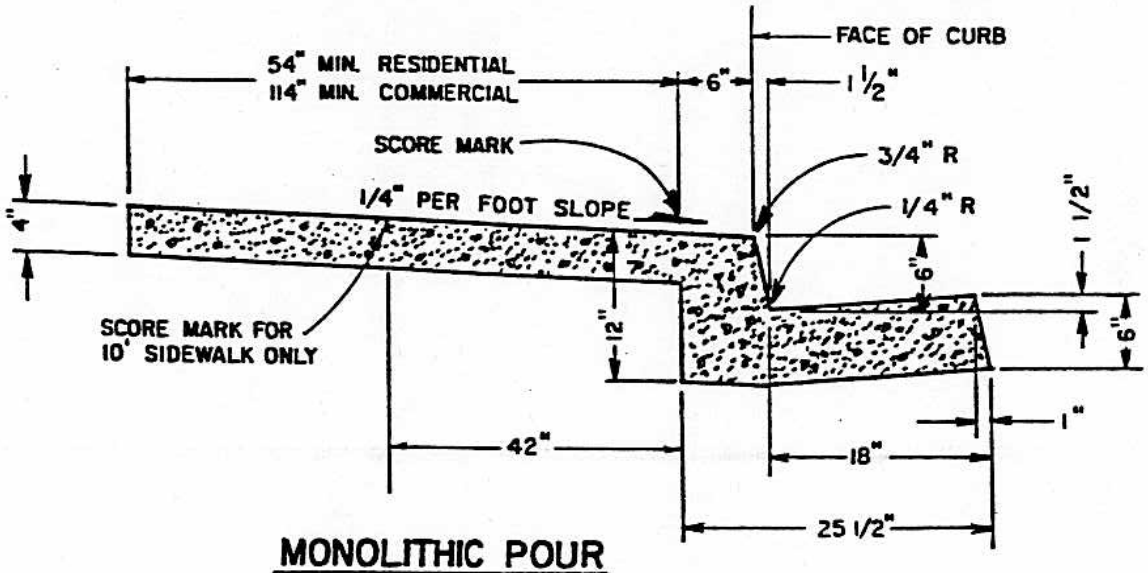


## MONOLITHIC POUR

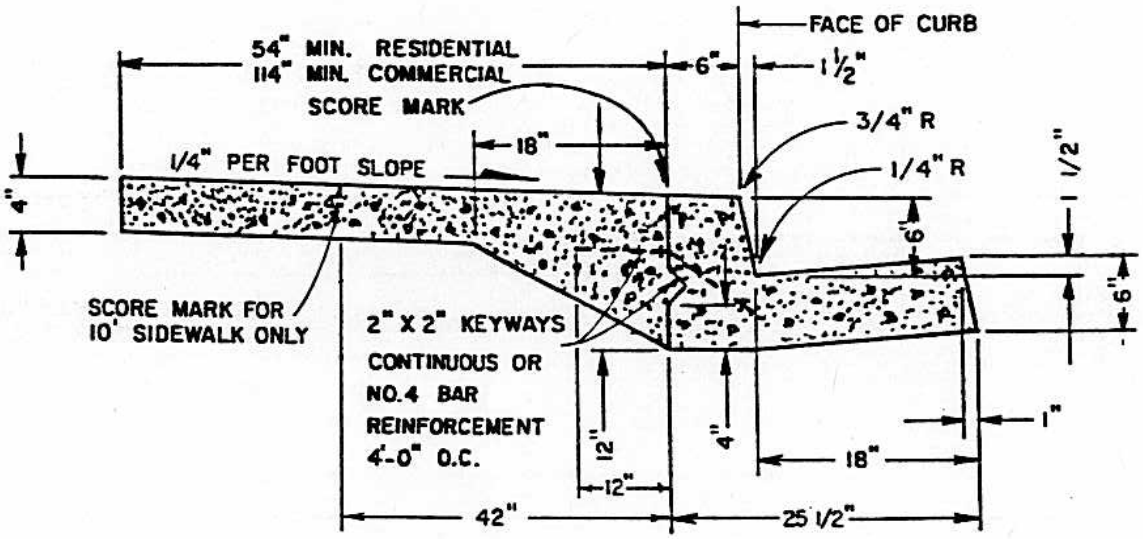


## SEPARATE POURS

## NOTES:

1. A "W" FOR WATER SERVICES AND A "S" FOR SEWER LATERALS SHALL BE STAMPED AT BACK OF SIDEWALK OVER APPROPRIATE SERVICES IN LETTERS 2"–3" HIGH X 1/4" DEEP.
2. MINIMUM GUTTER SLOPE TO BE .0025 FT/FT.
3. VERTICAL FACES TO BE FORMED ON ALL REPAIR WORK UNLESS POURING AGAINST EXISTING CONCRETE.

| NO. | REVISED | BY |
|---|---|---|
| 1 | JAN. 1988 | JK |

DRAWN BY: A. MENOR

CHECKED BY: J. PODESTA

SCALE: NONE

# VERTICAL CURB, GUTTER AND SIDEWALK

CITY OF MANTECA
DEPARTMENT OF PUBLIC WORKS

APPROVED BY: M. Brinton
DIRECTOR OF PUBLIC WORKS

DRAWING NO. ST-7

DATE: JAN. 1988

PRINTED ON DIEPO NO. 1000H CLEARPRINT

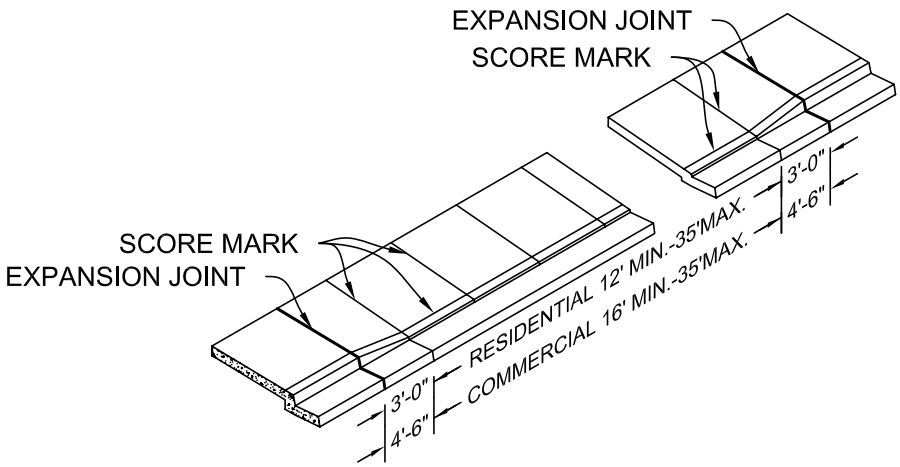


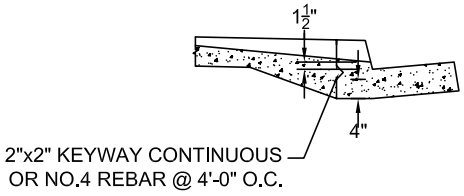


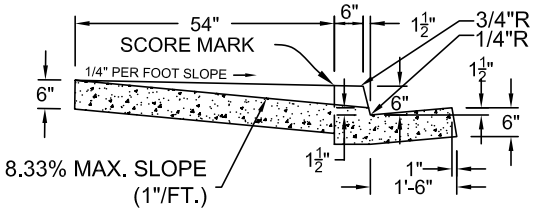


MONOLITHIC POUR

DRIVEWAY FOR 5 FOOT SIDEWALK

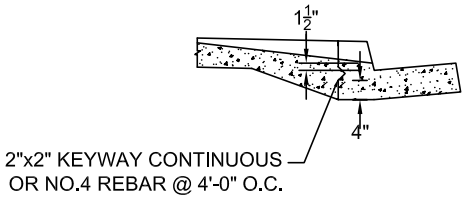


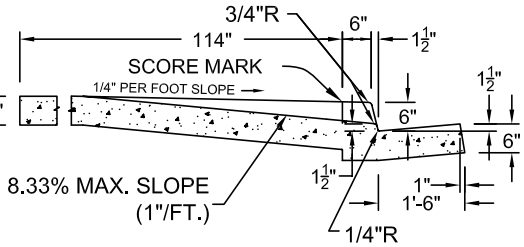


MONOLITHIC POUR

DRIVEWAY FOR 10 FOOT SIDEWALK

NOTES:

1. DRIVEWAY SHALL BE A MINIMUM OF 3 FEET FROM SIDE PROPERTY LINE.
2. SIDEWALK SCORING TO MATCH EXISTING OR TO BE PLACED AT 4 FOOT INTERVALS ON NEW CONSTRUCTION.
3. DRIVEWAYS ON RESIDENTIAL CORNER LOTS SHALL NOT BE LOCATED ON THAT HALF OF THE LOT FRONTAGE NEAREST THE RADIUS RETURN, NOR CLOSER THAN 20 FEET FROM SAID RADIUS RETURN.
4. #4 REBAR @ 18" O.C. EACH WAY SHALL BE USED FOR COMMERCIAL DRIVEWAYS.

| NO. | REVISED | BY | DRIVEWAYS FOR VERTICAL CURB AND GUTTER | APPROVED BY: |
|---|---|---|---|---|
| 2 | SEPT 2004 | SF | | DIRECTOR OF PUBLIC WORKS |
| DRAWN BY: | S. FOX | | | |
| CHECKED BY: | J. PODESTA | | CITY OF MANTECA | DRAWING NO. ST-8A |
| SCALE: | NONE | | DEPARTMENT OF PUBLIC WORKS | DATE: JAN 1988 |

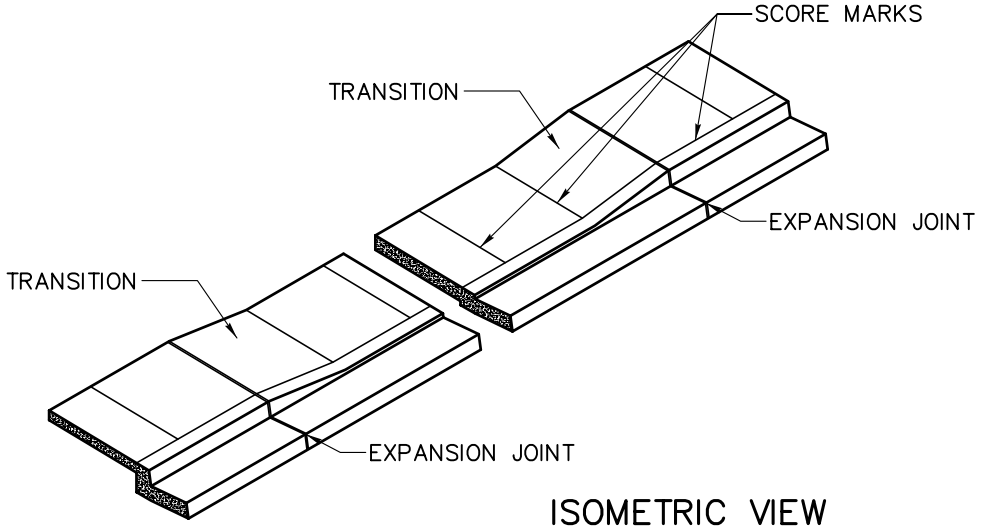


ISOMETRIC VIEW

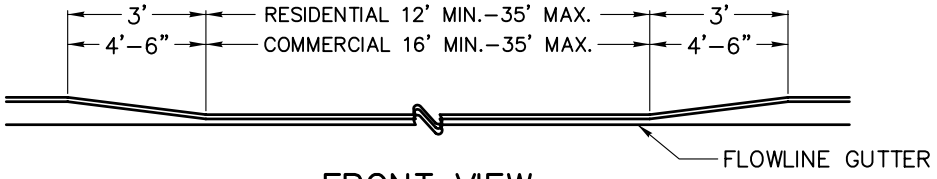


FRONT VIEW

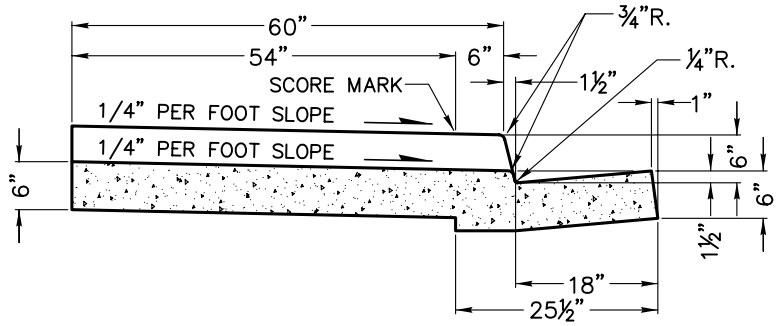


CROSS–SECTION

## NOTES:

1. THIS MODIFIED DRIVEWAY FOR VERTICAL CURB & GUTTER SHALL ONLY BE USED WHEN APPROVED BY THE CITY ENGINEER.
2. DRIVEWAYS SHALL BE A MINIMUM OF 3 FEET FROM SIDE PROPERTY LINE.
3. SIDEWALK SCORING TO MATCH EXISTING OR TO BE PLACED AT 4 FOOT INTERVALS ON NEW CONSTRUCTION.
4. DRIVEWAYS ON RESIDENTIAL CORNER LOTS SHALL NOT BE LOCATED ON THAT HALF OF THE LOT FRONTAGE NEAREST THE RADIUS RETURN, NOR CLOSER THAN 20 FEET FROM SAID RADIUS RETURN.
5. COMMERCIAL AND INDUSTRIAL DRIVEWAYS SHALL HAVE #4 REBARS 18" O.C. EACH WAY.

| NO. | REVISED | BY |
|---|---|---|
| | | |

DRAWN BY: J. HULSEY
CHECKED BY: J. PODESTA
SCALE: NOT TO SCALE

# MODIFIED DRIVEWAY FOR VERTICAL CURB & GUTTER

CITY OF MANTECA
DEPARTMENT OF PUBLIC WORKS

APPROVED BY:

DIRECTOR OF PUBLIC WORKS

DRAWING NO. ST-8B
DATE: SEPT. 2004

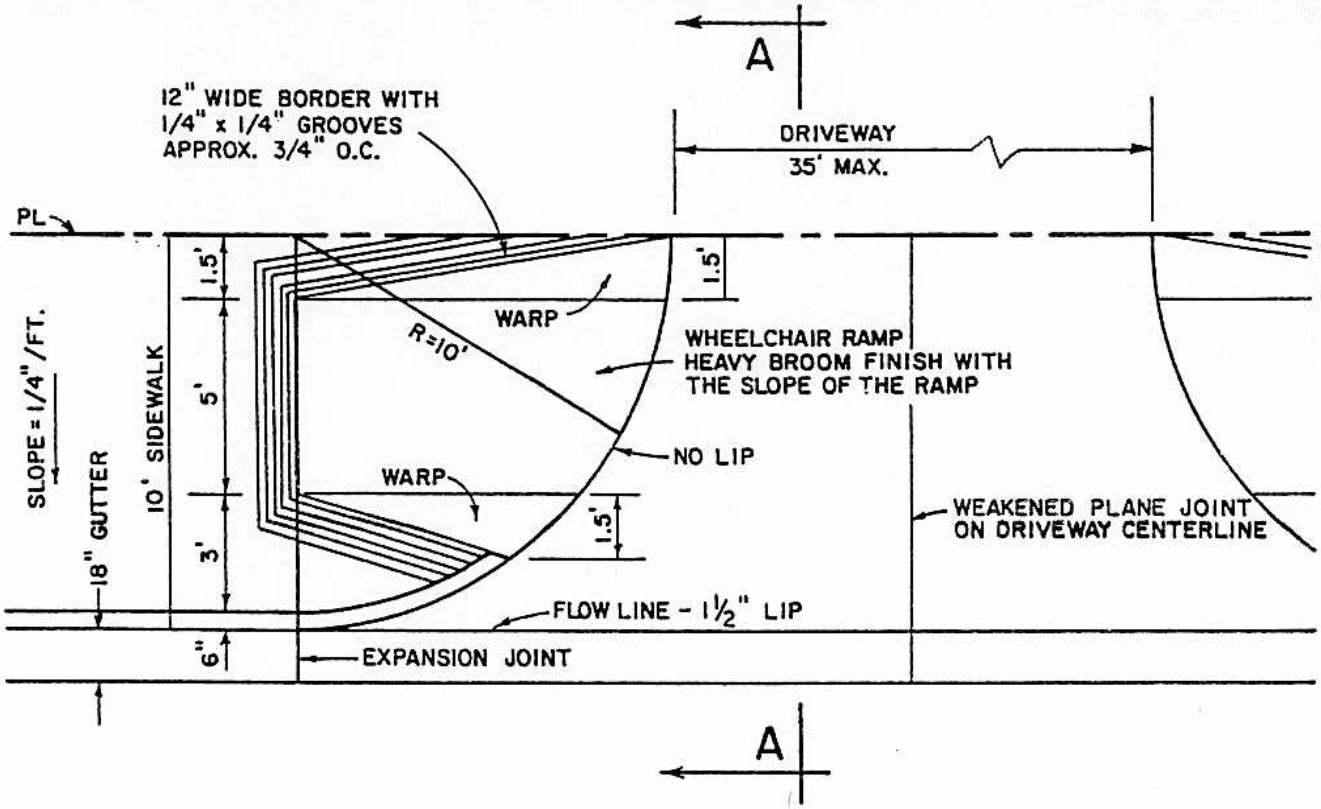


PLAN

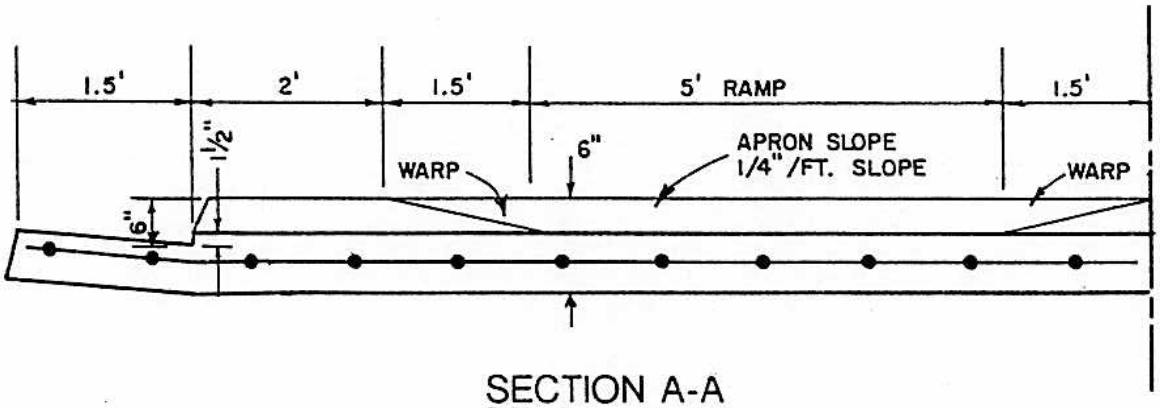


SECTION A-A

**NOTES:**

1. THIS DRIVEWAY IS TO BE USED ONLY WHERE APPROVED BY THE PUBLIC WORKS DEPARTMENT.

2. REINFORCING SHALL BE #4 BARS AT 18" ON CENTER EACH WAY OR AN EQUIVALENT WELDED WIRE FABRIC UPON APPROVAL OF THE ENGINEER.

| NO. | REVISED | BY | SPECIAL COMMERCIAL DRIVEWAY | APPROVED BY: M A Brixton DIRECTOR OF PUBLIC WORKS |
|---|---|---|---|---|
| 1 | OCT. 1989 | JK | | |
| DRAWN BY: J. KOESTER | | | | |
| CHECKED BY: J. PODESTA | | | CITY OF MANTECA DEPARTMENT OF PUBLIC WORKS | DRAWING NO. ST-9 |
| SCALE: NONE | | | | DATE: JAN. 1988 |

PRINTED ON DIEPO NO 1000H CLEARPRINT

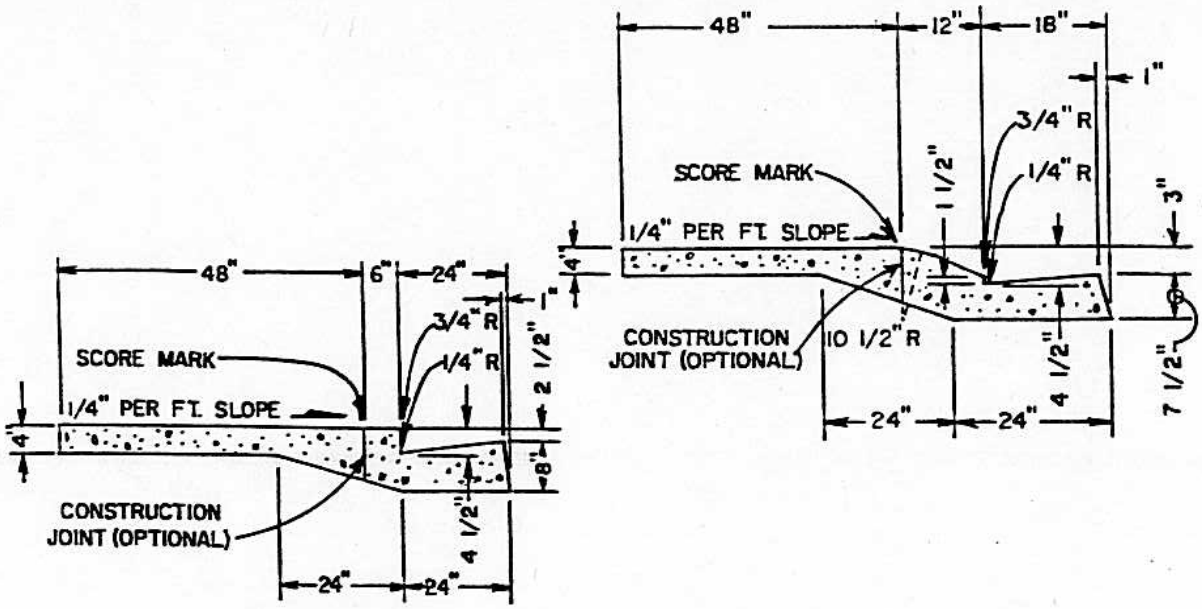


RADIUS DETAIL

## BRIZENDINE MACHINE BASE OR EQUAL

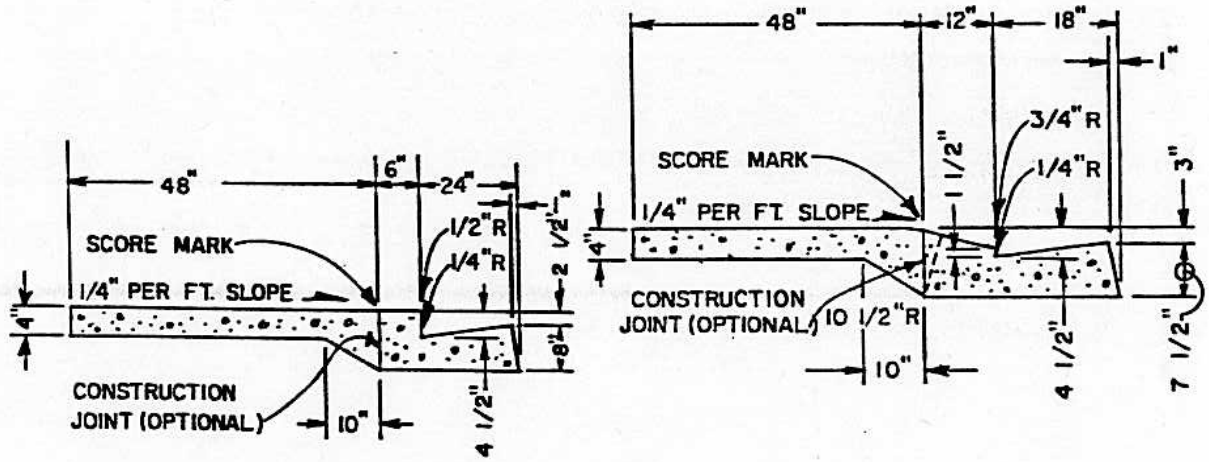


RADIUS DETAIL

## STANDARD

**NOTES:**

1. A "W" FOR WATER SERVICES AND A "S" FOR SEWER LATERALS SHALL BE STAMPED AT THE BACK OF SIDEWALK OVER APPROPRIATE SERVICES IN LETTERS 2"–3" HIGH X 1/4" DEEP.
2. MINIMUM GUTTER SLOPE TO BE .0025 FT./FT.
3. VERTICAL FACES TO BE FORMED ON ALL REPAIR WORK UNLESS POURING AGAINST EXISTING CONCRETE.

| NO. | REVISED | BY | DRIVE-OVER CURB GUTTER AND SIDEWALK | APPROVED BY: M. Brinton DIRECTOR OF PUBLIC WORKS |
|---|---|---|---|---|
| DRAWN BY: A. MENOR | | | | |
| CHECKED BY: J. PODESTA | | | CITY OF MANTECA DEPARTMENT OF PUBLIC WORKS | DRAWING NO. ST-10 |
| SCALE: NONE | | | | DATE: JAN. 1988 |

PRINTED ON DIEPO NO. 1000H CLEARPRINT

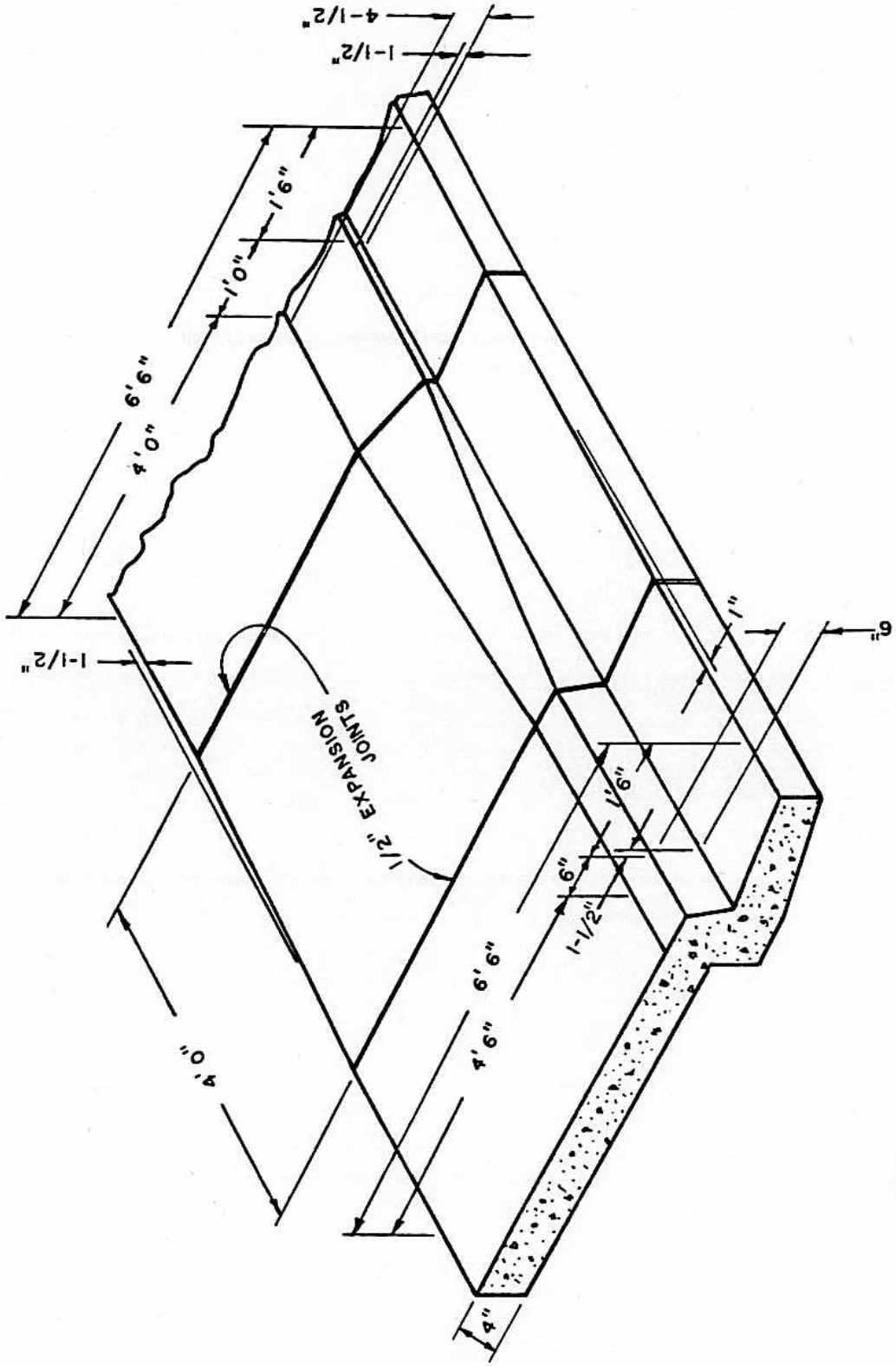


**NOTES:**

1. THIS TRANSITION TO BE USED ON STRAIGHT RUN AND NOT AT RADIUS RETURNS.
2. VERTICAL CURB AND SIDEWALK TO BE 5 FEET.

| NO. | REVISED | BY |
|---|---|---|
| | | |

DRAWN BY: C. SABERTON

CHECKED BY: J. PODESTA

SCALE: NONE

# VERTICAL CURB TRANSITION TO DRIVE-OVER CURB

CITY OF MANTECA
DEPARTMENT OF PUBLIC WORKS

APPROVED BY: M. Brinton
DIRECTOR OF PUBLIC WORKS

DRAWING NO. ST-11

DATE: JAN. 1988

PRINTED ON DIEPO NO. 1000H CLEARPRINT

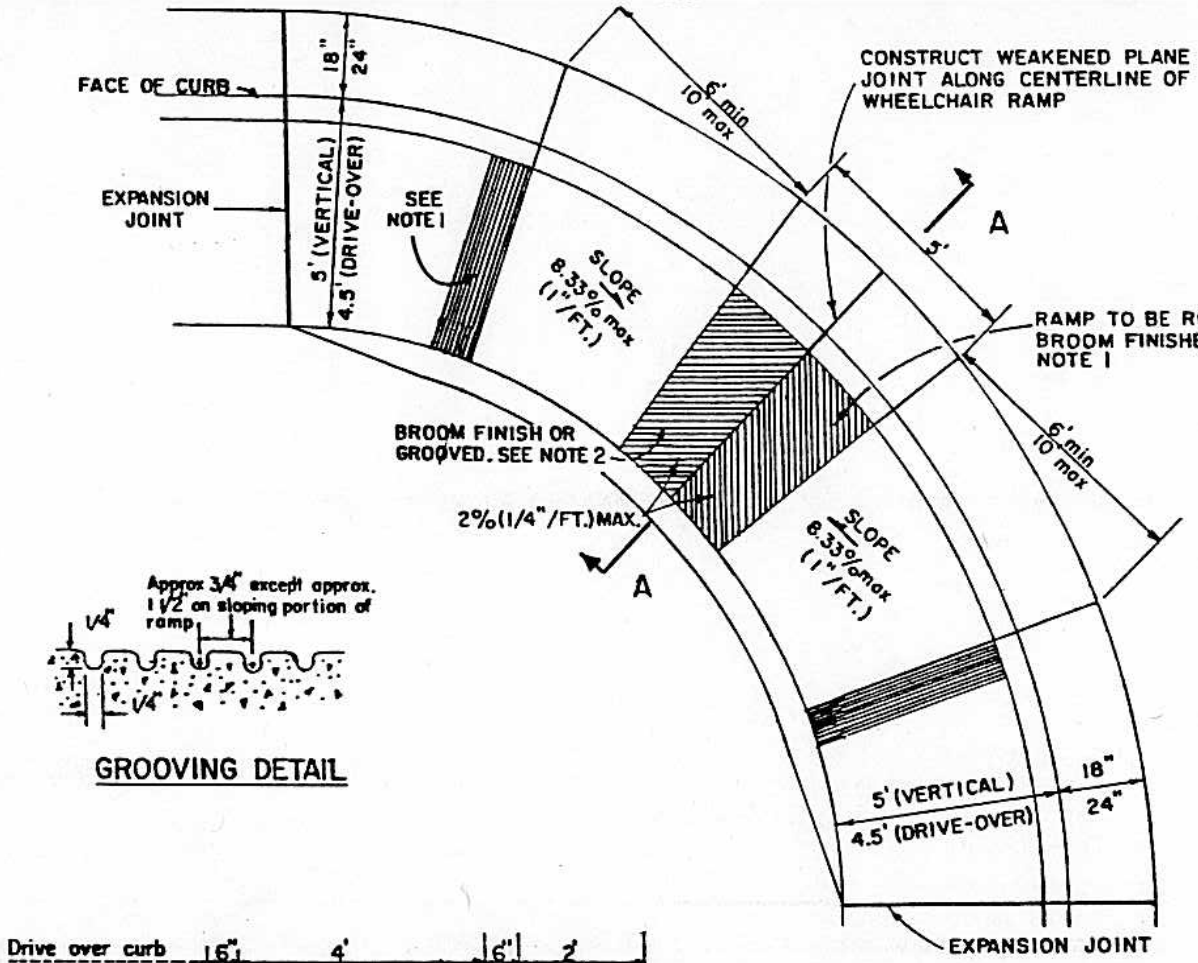





GROOVING DETAIL

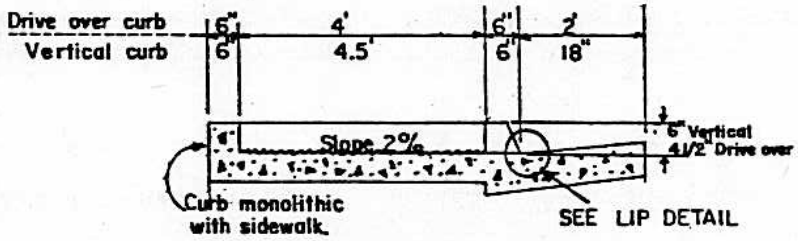


SECTION A-A

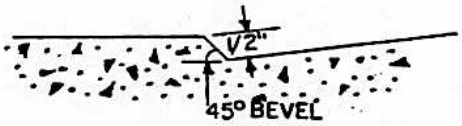


LIP DETAIL

**NOTES:**

1. THE RAMP SHALL HAVE A 12" WIDE BORDER WITH 1/4" GROOVES APPROXIMATELY 3/4" ON CENTER (SEE GROOVING DETAIL). THE SURFACE OF THE RAMP SHALL HAVE A TRANSVERSE BROOMED SURFACE TEXTURE ROUGHER THAN THE SURROUNDING SIDEWALK.

2. WHEN RAMP IS LOCATED IN CENTER OF THE CURB RETURN, THE CENTER SECTION SHALL BE GROOVED IN A HERRINGBONE PATTERN WITH 1/4" GROOVES APPROXIMATELY 1-1/2" ON CENTER (SEE GROOVING DETAIL). GROOVES SHOULD BE ALIGNED PARALLEL TO CROSSWALK STRIPES TO DIRECT BLIND PEDESTRIANS INTO APPROPRIATE CROSSWALK. HERRINGBONE PATTERN SHALL NOT BE GROOVED INTO WHEELCHAIR RAMP UNLESS CROSSWALK STRIPES ARE IN PLACE.

3. WHEELCHAIR RAMP DETAILS FOR RECONSTRUCTION WORK SHALL BE APPROVED BY THE PUBLIC WORKS DEPARTMENT.

| NO. | REVISED | BY | WHEELCHAIR RAMP FOR 5' SIDEWALK | APPROVED BY: M. Brinton DIRECTOR OF PUBLIC WORKS |
|---|---|---|---|---|
| 1 | JAN. 1988 | JK | | |
| DRAWN BY: D. MENDOZA | | | | |
| CHECKED BY: J. PODESTA | | | CITY OF MANTECA DEPARTMENT OF PUBLIC WORKS | DRAWING NO. ST-12 |
| SCALE: NONE | | | | DATE: JAN. 1988 |

PRINTED ON DIEPO NO 1000H CLEARPRINT

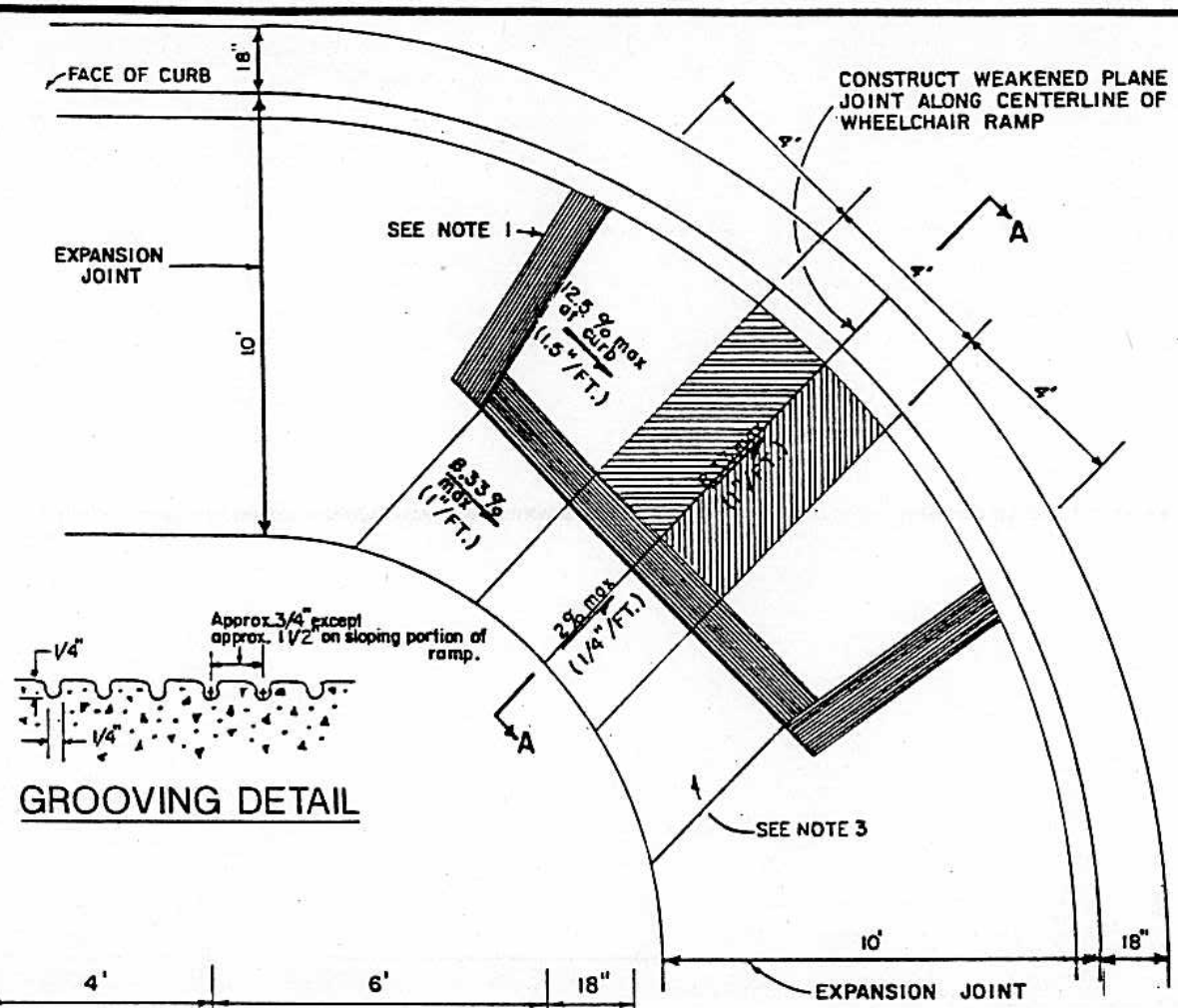


GROOVING DETAIL

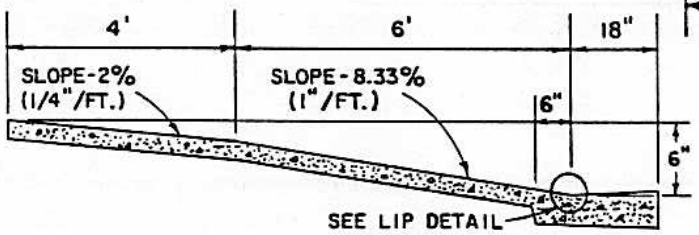


SECTION A-A

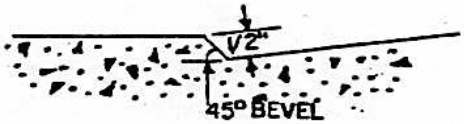


LIP DETAIL

**NOTES:**

1. THE RAMP SHALL HAVE A 12" WIDE BORDER WITH 1/4" GROOVES APPROXIMATELY 3/4" ON CENTER (SEE GROOVING DETAIL). THE SURFACE OF THE RAMP SHALL HAVE A TRANSVERSE BROOMED SURFACE TEXTURE ROUGHER THAN THE SURROUNDING SIDEWALK.

2. WHEN RAMP IS LOCATED IN CENTER OF THE CURB RETURN, THE CENTER SECTION SHALL BE GROOVED IN A HERRINGBONE PATTERN WITH 1/4" GROOVES APPROXIMATELY 1-1/2" ON CENTER (SEE GROOVING DETAIL). GROOVES SHOULD BE ALIGNED PARALLEL TO CROSSWALK STRIPES TO DIRECT BLIND PEDESTRIANS INTO APPROPRIATE CROSSWALK. HERRINGBONE PATTERN SHALL NOT BE GROOVED INTO WHEELCHAIR RAMP UNLESS CROSSWALK STRIPES ARE IN PLACE.

3. TRANSISTION FROM RAMP TO SIDEWALK SHALL BE MADE IN 3 FEET.

| NO. | REVISED | BY | | |
|---|---|---|---|---|
| 1 | JAN. 1988 | JK | **WHEELCHAIR RAMP FOR 10' SIDEWALK** | APPROVED BY: DIRECTOR OF PUBLIC WORKS |
| DRAWN BY: D. MENDOZA | | | | |
| CHECKED BY: J. PODESTA | | | CITY OF MANTECA DEPARTMENT OF PUBLIC WORKS | DRAWING NO. ST-13 |
| SCALE: NONE | | | | DATE: JAN. 1988 |

PRINTED ON DIEPO NO 1000H CLEARPRINT

## PAVEMENT DESIGN CHART

| STREET NAME | TRAFFIC INDEX | SOIL R-VALUE | ADJUSTED R-VALUE | A.B. THICKNESS | A.C. THICKNESS | LIFT & THICKNESS |
|---|---|---|---|---|---|---|
| | | | | | | |
| | | | | | | |
| | | | | | | |
| | | | | | | |
| | | | | | | |
| | | | | | | |
| | | | | | | |
| | | | | | | |
| | | | | | | |

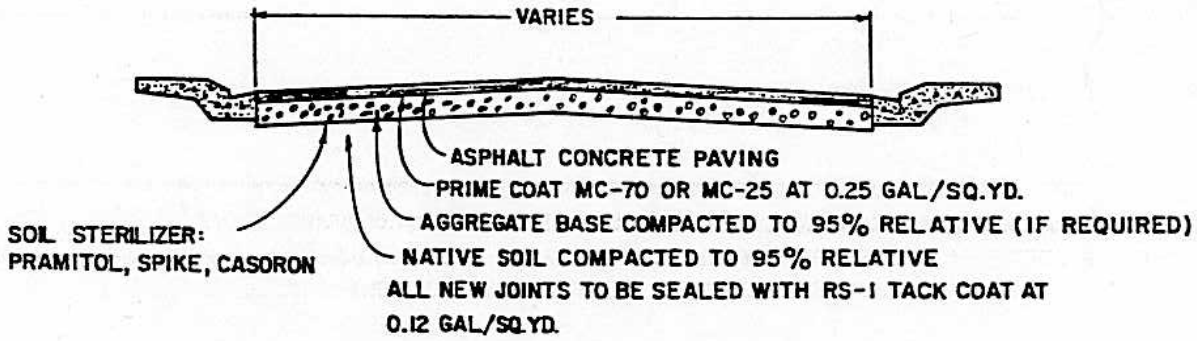


1. SOIL STERILIZER SHALL BE APPLIED WHEN ASPHALT CONCRETE PAVING IS PLACED DIRECTLY ON NATIVE MATERIAL ONLY.
2. PAVEMENT STRUCTURAL DESIGN SHALL BE BASED UPON "THE FLEXIBLE PAVEMENT STRUCTURAL SECTION DESIGN GUIDE FOR CALIFORNIA CITIES AND COUNTIES", AS MODIFIED IN CITY RESOLUTION NO. R5633.
3. CONSTRUCTION SHALL CONFORM WITH THE LATEST STANDARD SPECIFICATION OF THE STATE OF CALIFORNIA.
   ASPHALT CONCRETE SHALL BE TYPE "B"
   AGGREGATE BASE SHALL BE CLASS "2"
4. BASE SHALL BE WATERED AND COMPACTED PURSUANT TO STATE SPECIFICATIONS EXCEPT-95% TO 0.5 FEET BELOW FINISHED SUBGRADE-90% TO 2.5 FEET BELOW FINISHED SUBGRADE.
5. PRIME COAT SHALL BE APPLIED WHEN ASPHALT CONCRETE PAVING IS PLACED ON AGGREGATE BASE MATERIAL ONLY.

| NO. | REVISED | BY |
|---|---|---|
| | | |

DRAWN BY: J. HULSEY
CHECKED BY: J. PODESTA
SCALE: NONE

**PAVEMENT DESIGN CHART AND STREET CROSS SECTION**

CITY OF MANTECA
DEPARTMENT OF PUBLIC WORKS

APPROVED BY: M. Brinton
DIRECTOR OF PUBLIC WORKS

DRAWING NO. ST-14
DATE: JAN. 1988

PRINTED ON DIEPO NO. 1000H CLEARPRINT

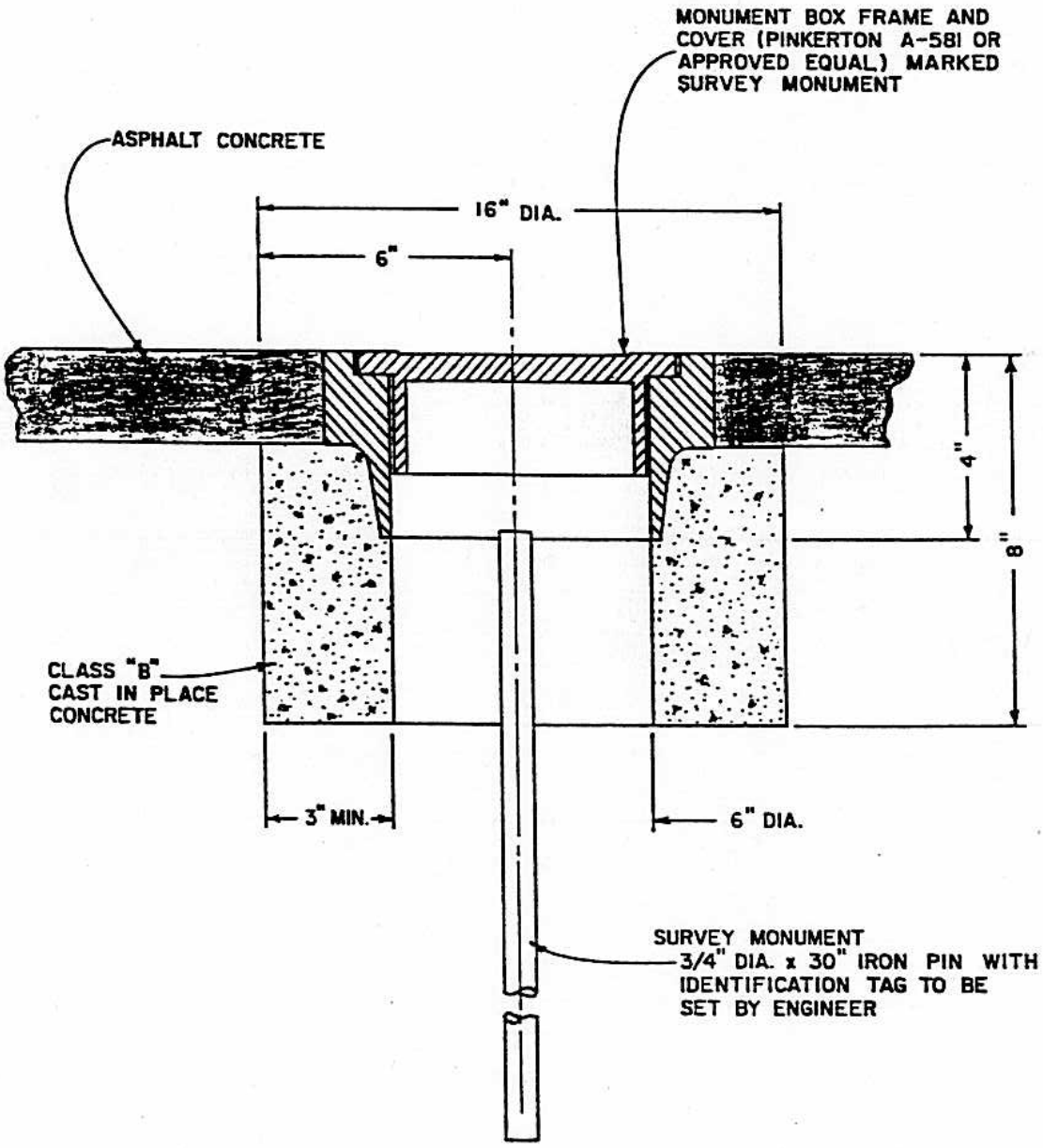


NOTE: MONUMENTS ARE TO BE SET AFTER STREETS HAVE BEEN PAVED.

| NO. | REVISED | BY | MONUMENT BOX DETAIL | APPROVED BY: M. Brinton DIRECTOR OF PUBLIC WORKS |
|---|---|---|---|---|
| | | | | |
| DRAWN BY: B. CANTU | | | | |
| CHECKED BY: J. PODESTA | | | CITY OF MANTECA DEPARTMENT OF PUBLIC WORKS | DRAWING NO. ST-15 |
| SCALE: NONE | | | | DATE: JAN. 1988 |

PRINTED ON DIEPO NO. 1000H CLEARPRINT

PINKERTON A-581 OR EQUAL
FRAME PART NO. A-582 APPROX. WT. 22 LB.
COVER PART NO. A-583 APPROX. WT. 7 LB.

CAST IRON FRAME & COVER SHALL CONFORM TO A.S.T.M. DESIGNATION A-48.

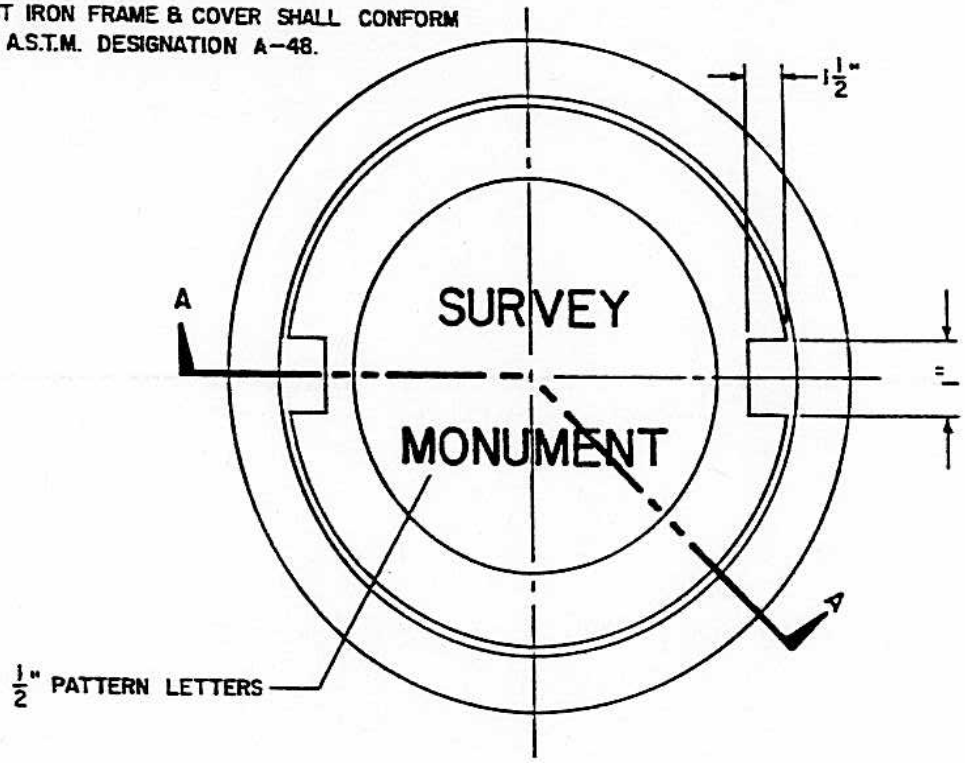


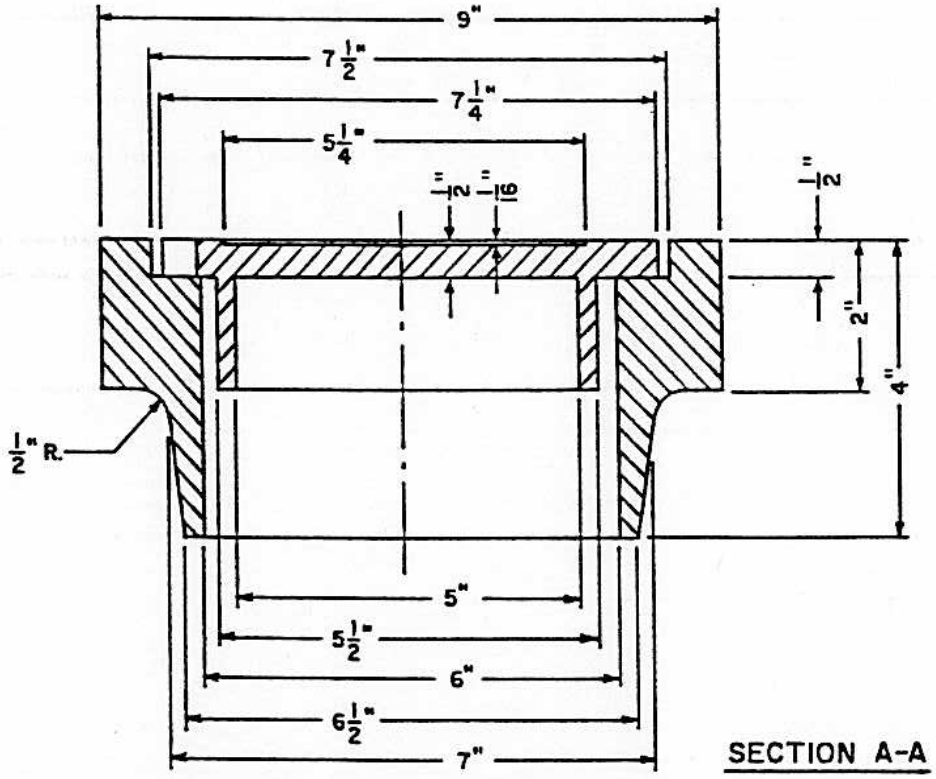


SECTION A-A

| NO. | REVISED | BY |
|---|---|---|
| 1 | JAN. 1988 | JK |

DRAWN BY: B. CANTU
CHECKED BY: J. PODESTA
SCALE: NONE

**STANDARD MONUMENT BOX FRAME AND COVER ASSEMBLY**

CITY OF MANTECA
DEPARTMENT OF PUBLIC WORKS

APPROVED BY: M. Brinton
DIRECTOR OF PUBLIC WORKS

DRAWING NO. ST-16
DATE: JAN. 1988

PRINTED ON DIEPO NO. 1000H CLEARPRINT

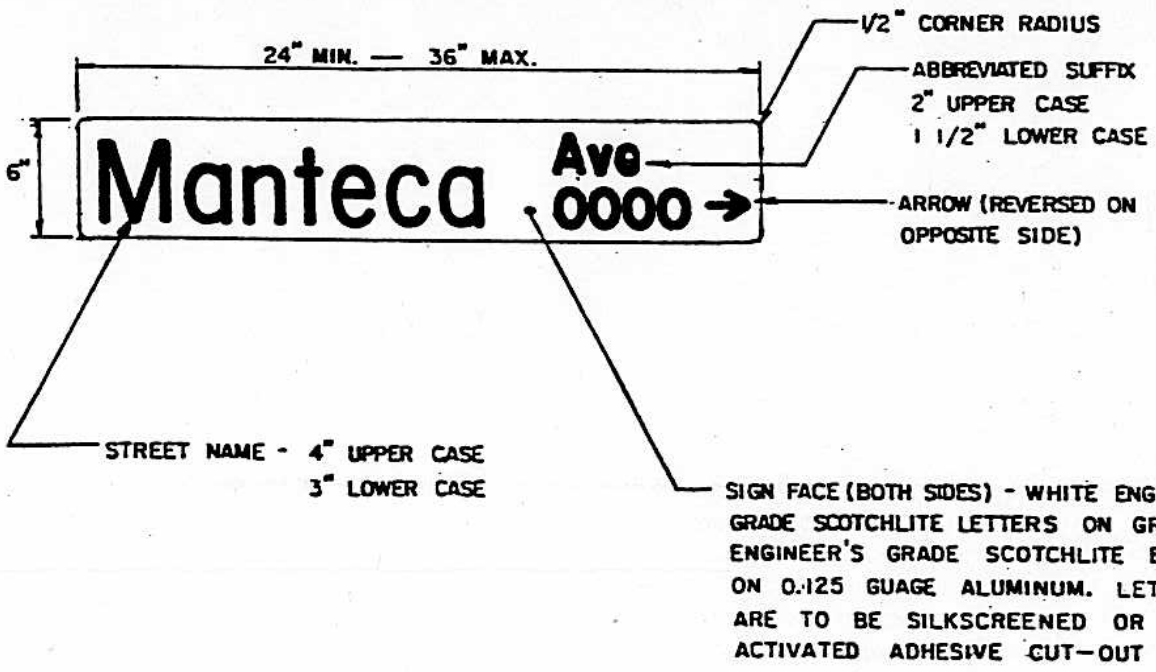


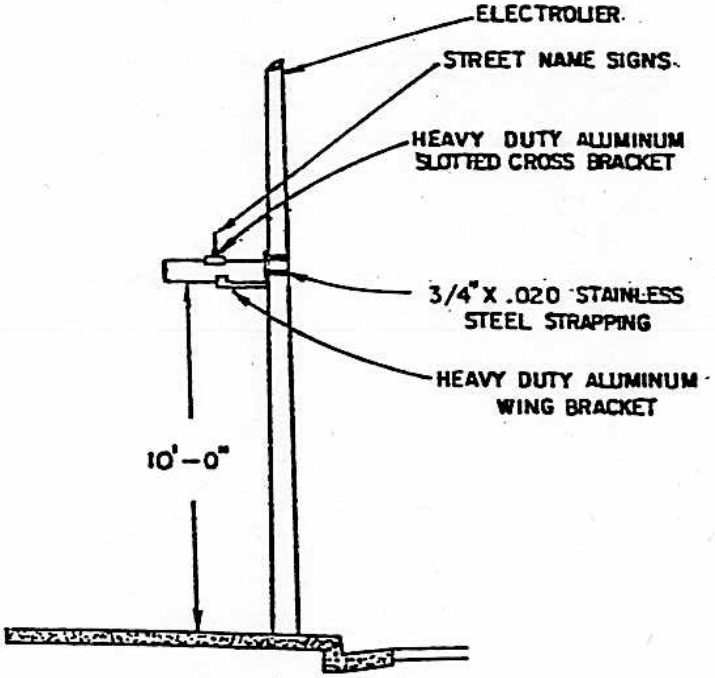


SIGN PLACEMENT
WITH POLE AT BACK OF CURB

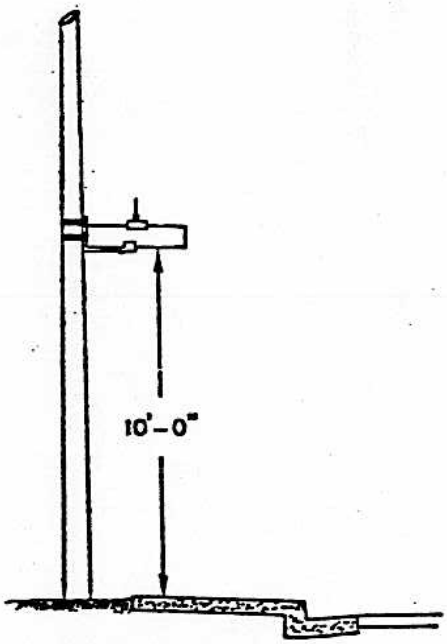


SIGN PLACEMENT
WITH POLE AT BACK OF SIDEWALK

| NO. | REVISED | BY |
|---|---|---|
| | | |

DRAWN BY: J. HULSEY
CHECKED BY: J. PODESTA
SCALE: NONE

**STREET SIGN INSTALLATION ON ELECTROLIER**

CITY OF MANTECA
DEPARTMENT OF PUBLIC WORKS

APPROVED BY: M. Brinton
DIRECTOR OF PUBLIC WORKS

DRAWING NO. ST-18
DATE: JAN. 1988

PRINTED ON DIEPO NO. 1000H CLEARPRINT

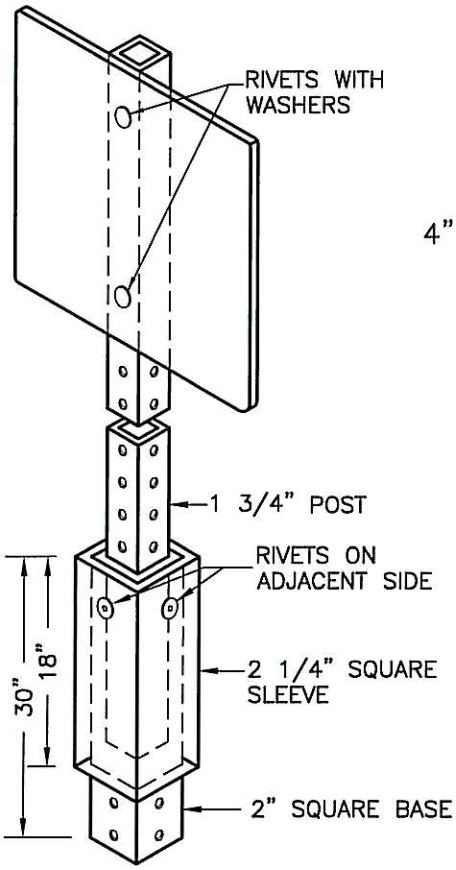


**SIGN POST MOUNTING DETAIL**

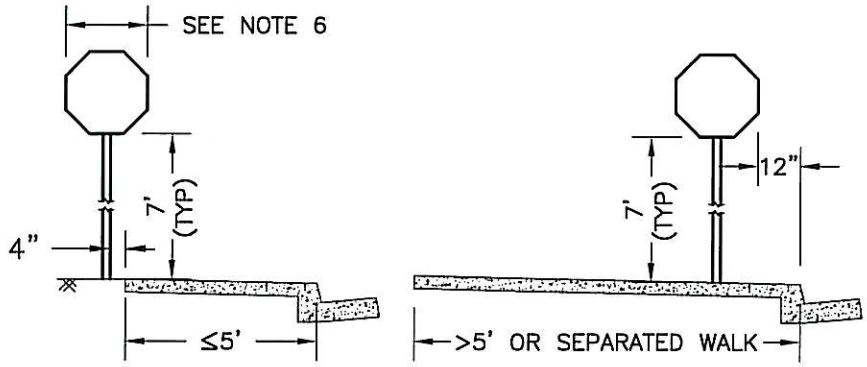


**POST PLACEMENT**

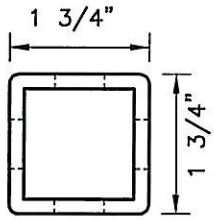


**POST SECTION**

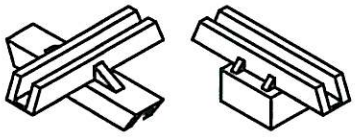

ZUMAR STYLE 850 LONG 5¼" 90° CROSSPIECE AND 1¾" POST CAP OR APPROVED EQUAL.

**STREET NAME SIGN MOUNTING DETAIL**

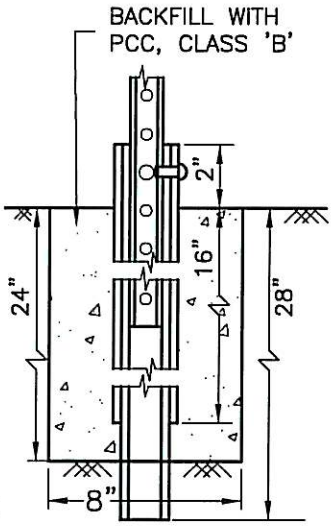


**SIGN POST BASE DETAIL**

NOTES

1. MATERIALS:
   - POST – 1 3/4" SQUARE WITH ROUNDED CORNERS, 14 GA. GALV. HIGH STRENGTH RAIL STEEL ASTM A715, GRADE 60. (TELESPAR PART # 16D12–PG OR APPROVED EQUAL.) GALVANIZED POST FINISH SHALL CONFORM TO ASTM A525 G90 COATING.
   - POST BASE ANCHOR – 30" LONG X 2" SQUARE 12 GA. GALV. STEEL (TELESPAR PART # 20F12A2.5 OR APPROVED EQUAL.)
   - POST BASE SLEEVE – 18" LONG X 2¼" SQUARE 12 GA. GALV. STEEL (TELESPAR PART # TEL–22F12–A OR APPROVED EQUAL.)
   - SIGN FACE – SHALL BE REFLECTIVE AND PLACED ON .080" MINIMUM THICKNESS ALUMINUM WITH 3M HIGH–INTENSITY GRADE PRISMATIC REFLECTIVE SHEETING SERIES 3930 OR APPROVED EQUAL.
2. STREET NAME SIGNS SHALL BE MOUNTED ON STREET LIGHT POLES IN CONFORMANCE WITH CITY STANDARD ST–18 WHEREVER POSSIBLE.
3. STREET NAME SIGN LOCATION SUBJECT TO CITY ENGINEER APPROVAL.
4. SIGN POLES SHALL BE SET PRIOR TO NEW SIDEWALK CONSTRUCTION.
5. SIGNS SHALL CONFORM TO CALTRANS STANDARDS AND SPECIFICATIONS UNLESS OTHERWISE APPROVED BY THE CITY ENGINEER.
6. STOP SIGN DIMENSION:
   - TWO (2) LANE ROADWAY: 30"X30" MIN.
   - FOUR (4) LANES OR MORE: 36"X36" MIN.

| | | | |
|---|---|---|---|
| DATE: | 9–2–2009 | **TRAFFIC, PARKING, AND STREET NAME SIGNS** | APPROVED: Mark Houghton DIRECTOR OF PUBLIC WORKS |
| DRAWN BY: | J.R. | | |
| CHECKED BY: | M.M. | **CITY OF MANTECA** PUBLIC WORKS DEPARTMENT | **ST-19** |
| SCALE: | N.T.S. | | |

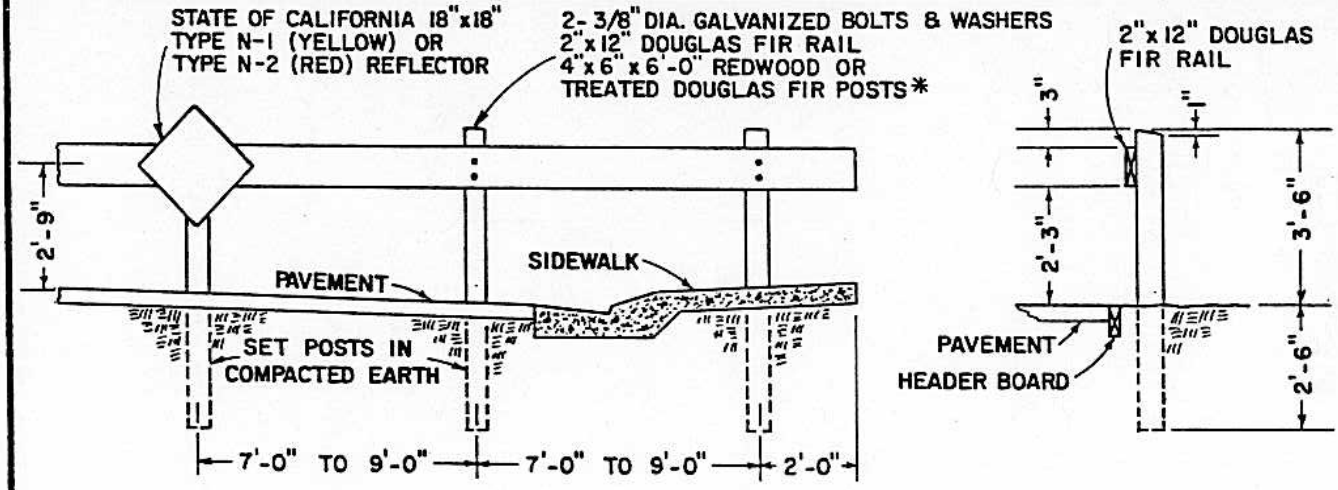


TYPE "A"

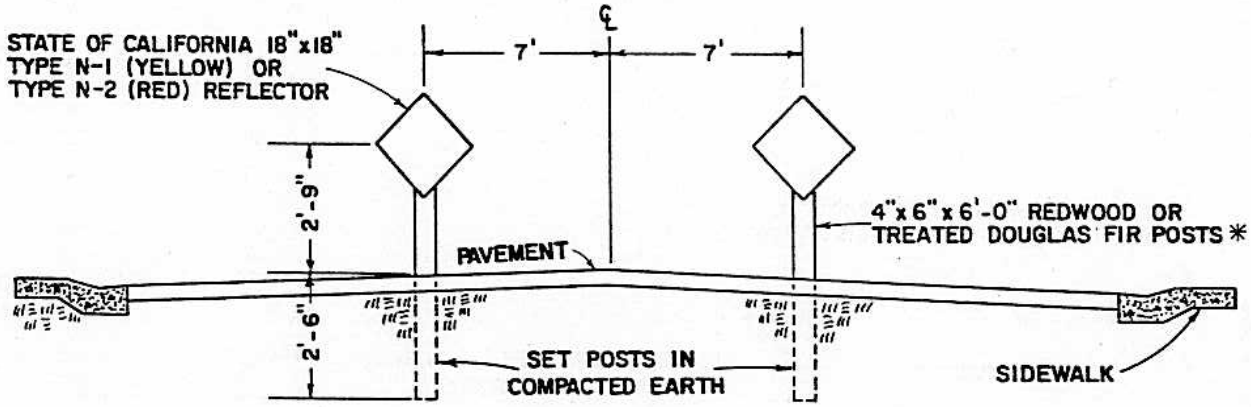


TYPE "B"

* STATE OF CALIFORNIA, SPECIFICATION 56-2.02B

**NOTES:**

1. TYPE "A" BARRICADES SHALL EXTEND FROM THE BACK OF SIDEWALK TO THE BACK OF SIDEWALK.
2. TYPE "A" BARRICADES SHALL BE USED WHERE STREETS ARE NOT TO BE EXTENDED FOR MORE THAN ONE YEAR OR AS DIRECTED BY THE DIRECTOR OF PUBLIC WORKS.
3. TYPE "B" BARRICADES SHALL BE USED WHERE STREETS ARE TO BE EXTENDED WITHIN A ONE YEAR PERIOD OR AS DIRECTED BY THE DIRECTOR OF PUBLIC WORKS.
4. TYPE N-2 REFLECTORS ARE TO BE USED AT DEAD-ENDS WHERE NO OUTLETS EXIST. TYPE N-1 REFLECTORS ARE TO BE USED AT ALL OTHER LOCATIONS. REFLECTORS SHALL BE FASTENED WITH 3/8" DIAMETER GALVANIZED BOLTS.
5. BARRICADES SHALL BE PAINTED YELLOW USING EXTERIOR HI-GLOSS ENAMEL OVER SUITABLE PRIMER.

| NO. | REVISED | BY | | |
|---|---|---|---|---|
| | | | **BARRICADE FOR STUBBED STREETS** | APPROVED BY: M. Brinton DIRECTOR OF PUBLIC WORKS |
| DRAWN BY: J. KOESTER | | | | |
| CHECKED BY: J. PODESTA | | | CITY OF MANTECA DEPARTMENT OF PUBLIC WORKS | DRAWING NO. ST-20 |
| SCALE: NONE | | | | DATE: JAN. 1988 |

PRINTED ON DIEPO NO 1000H CLEARPRINT

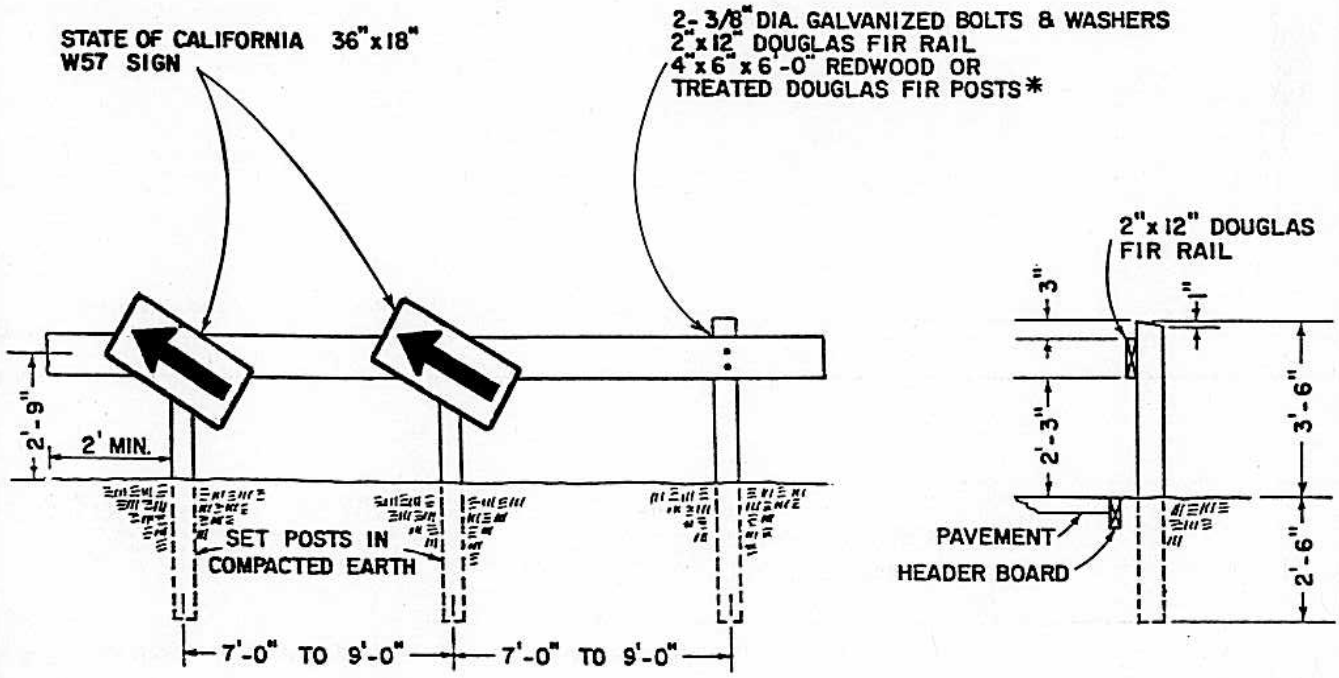


* STATE OF CALIFORNIA, SPECIFICATION 56-2.02B

**NOTES:**

1. ALTERNATE LOCATION OF TRANSITION BARRICADE SHALL BE APPROVED BY THE PUBLIC WORKS DEPARTMENT.
2. BARRICADES TO BE PAINTED YELLOW USING EXTERIOR HI-GLOSS ENAMEL OVER SUITABLE PRIMER.
3. SEE STANDARD DRAWING ST-22 FOR BARRICADE PLACEMENT.

| NO. | REVISED | BY | BARRICADE FOR ROADWAY TRANSITION | APPROVED BY: M. Brinton DIRECTOR OF PUBLIC WORKS |
|---|---|---|---|---|
| | | | | |
| DRAWN BY: J. KOESTER | | | | |
| CHECKED BY: J. PODESTA | | | CITY OF MANTECA DEPARTMENT OF PUBLIC WORKS | DRAWING NO. ST-21 |
| SCALE: NONE | | | | DATE: JAN. 1988 |

PRINTED ON DIEPO NO 1000H CLEARPRINT

PER CALTRANS "MANUAL OF TRAFFIC CONTROLS"

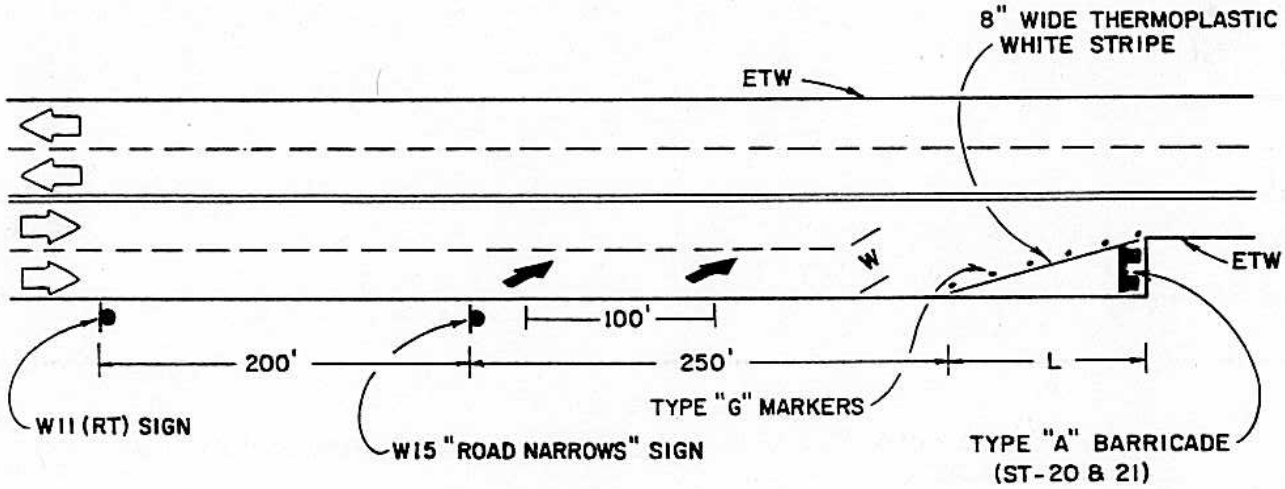


## LEGEND

L = Lane reduction length (ft)
W = Offset distance (ft)
S = Off peak 85 percentile speed (in 5 MPH).
⇨ Direction of travel
➚ Lane drop arrow
ETW= Edge of traveled way

**NOTES:**

1. THE LENGTH OF TRANSITION (L) SHOULD BE COMPUTED BY FORMULA L = WS FOR ALL HIGHWAYS WITH SPEEDS OF 45 MPH OR MORE.
2. ON URBAN, RESIDENTIAL, AND OTHER STREETS WHERE SPEEDS ARE 40 MPH OR LESS, THE FORMULA $L = WS^2/60$ MAY BE USED.
3. RAISED PAVEMENT MARKERS, TYPE G (CLEAR) IN SECTION 85-1.02 OF CALTRAN'S STANDARD SPECIFICATIONS, ARE TO BE USED AT A TWO INCH OFFSET TO THE THERMOPLASTIC STRIPE (ON THE TRAFFIC SIDE). MARKERS SHALL BE SET AT 24' ON CENTER.
4. A SECOND SET OF LANE DROP ARROWS MAY BE PLACED IN ADVANCE OF THE W11 SIGN. THE LANE DROP ARROWS ARE OPTIONAL ON HIGHWAYS WHERE SPEEDS ARE 40 MPH OR LESS.
5. A 100' MINIMUM DISTANCE MAY BE USED FOR LANE DROP ARROWS ON AN URBAN, RESIDENTIAL, OR OTHER STREET WHERE SPEEDS ARE 40 MPH OR LESS.

| NO. | REVISED | BY | LANE REDUCTION TRANSITION | APPROVED BY: DIRECTOR OF PUBLIC WORKS |
|---|---|---|---|---|
| | | | | |
| DRAWN BY: J. KOESTER | | | | |
| CHECKED BY: J. PODESTA | | | CITY OF MANTECA DEPARTMENT OF PUBLIC WORKS | DRAWING NO. ST-22 |
| SCALE: NONE | | | | DATE: JAN. 1988 |

PRINTED ON DIEPO NO 1000H CLEARPRINT

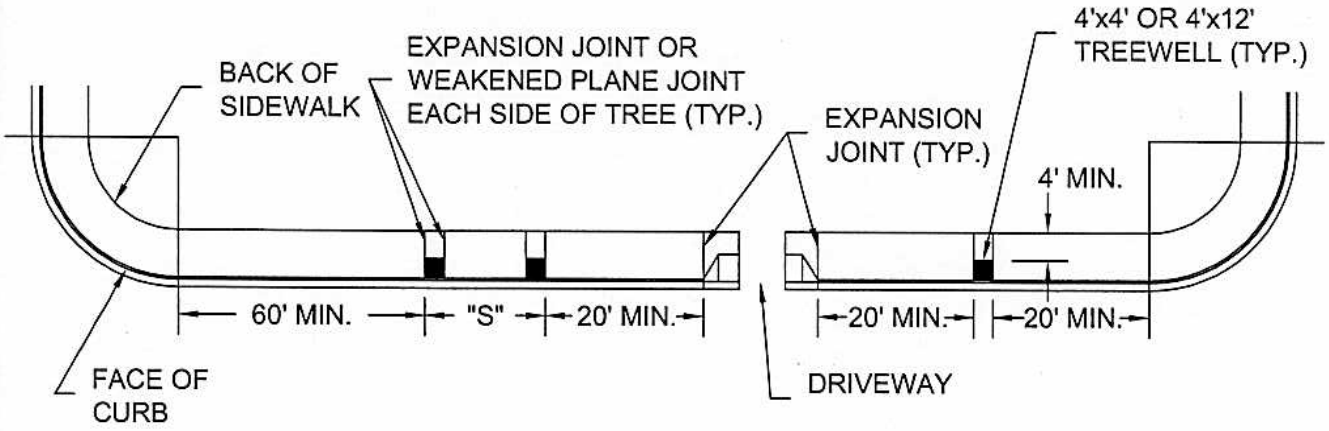


**NOTES**

1. "S" SPACING OF TREEWELLS SHALL BE EQUALLY DIVIDED THROUGHOUT THE BLOCK.
2. "S" SPACING SHALL BE 28 FEET MINIMUM AND 40 FEET MAXIMUM.
3. SIZE OF TREE WELLS SHALL BE 4' x 4' ALONG STREETS WITH ON STREET PARKING AND 4' x 12' ALONG STREETS WITHOUT ON STREET PARKING.
4. ALL TREES SHALL BE PLACED A MINIMUM DISTANCE OF 8' FROM SEWER LATERALS AND WATER SERVICES AND 20' FROM STREET LIGHTS.
5. PROVIDE BUBBLER SPRINKLER HEAD(S) TO EACH TREE WELL FROM ADJACENT LANDSCAPE AREA OR WATER SOURCE. FOR BACK-UP FRONTAGES, THE LOCATION OF THE VALVE IS TO BE APPROVED BY THE CITY ENGINEER. SEE CITY STANDARD W-12A AND W-12B FOR IRRIGATION DETAILS.
6. ALL NEW OR IMPROVED COMMERCIAL FRONTAGE SHALL HAVE TREE WELLS.

| NO. | REVISED | BY |
|---|---|---|
| 1 | 08/02/02 | saf |

DRAWN BY: S. FOX
CHECKED BY: J. PODESTA
SCALE: NONE

# STANDARD TREE WELL LOCATION

CITY OF MANTECA
DEPARTMENT OF PUBLIC WORKS

APPROVED BY: Michael F. Brinton
DIRECTOR OF PUBLIC WORKS

DRAWING NO. ST-23
DATE: JAN. 1988

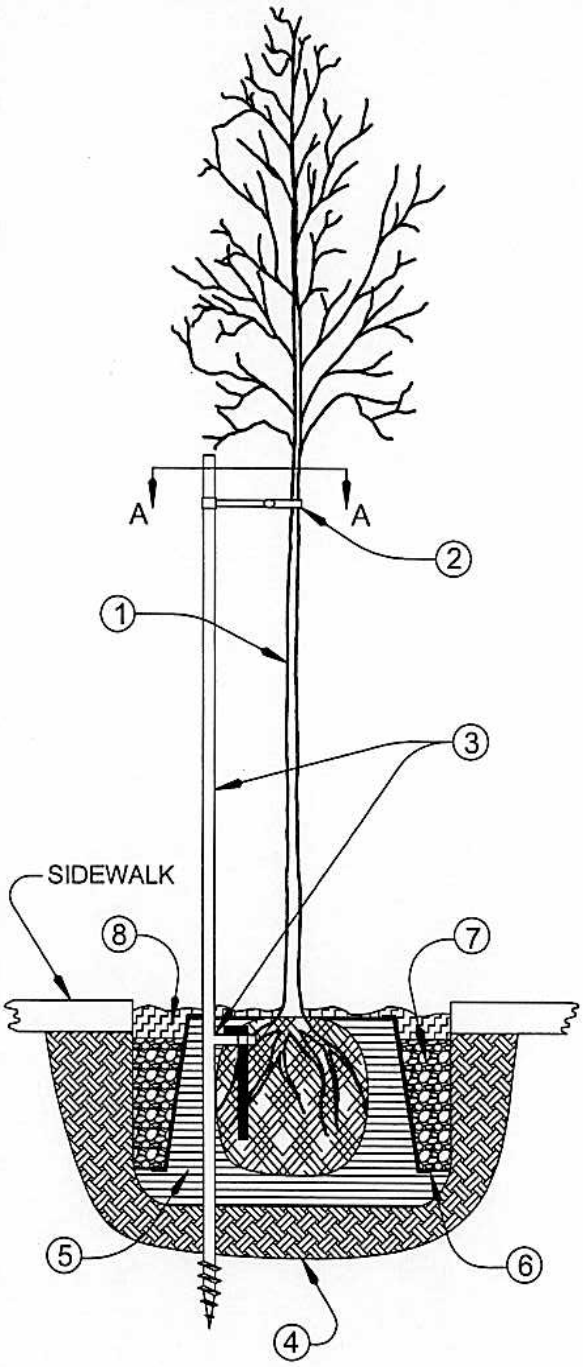


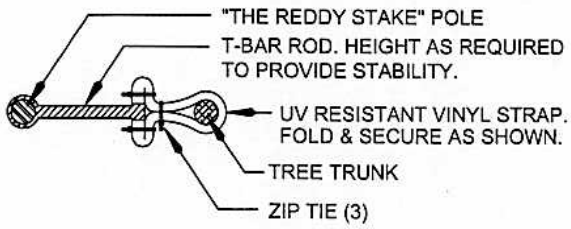


SECTION A-A

NOTES:

1. 15 GALLON TREE (VARIETY SPECIFIED BY THE PARKS AND RECREATION DEPARTMENT; ST-25) MINIMUM SIZE REQUIREMENTS:
   HEIGHT - 7 FEET
   TRUNK CALIPER - 3/4 INCH DBH
2. T-BAR ROD. HEIGHT AS REQUIRED TO PROVIDE STABILITY.
3. "THE REDDY STAKE" SYSTEM (OR APPROVED EQUAL). WITH TAB AND ANTI-ROTATION PIN. INSTALL TAB 2-4" BELOW GRADE. TREE STAKE TO BE LOCATED ON PREVAILING WIND SIDE.
4. EXCAVATION TO BE 20 INCHES DEEP AND TO THE FULL WIDTH AND MINIMUM 4' LENGTH OF TREEWELL.
5. PLANTING SOIL SHALL BE NATIVE ONLY.
6. SET ROOT CONTROL BARRIER (DEEP ROOT CORP. # 22-29-18-P OR ROOT BOOSTER # F1-48-BOX) ON NATIVE SOIL SO THAT TOP OF BARRIER IS 2 INCHES BELOW TOP OF SIDEWALK. PLANT TREE IN BARRIER AND BACKFILL WITH NATIVE SOIL. TREE AND BARRIER SHALL BE CENTERED IN TREEWELL.
7. FILL REMAINDER OF HOLE AROUND OUTSIDE OF BARRIER WITH 1-1/2" WASHED RIVER ROCK/DRAIN ROCK TO TOP OF BARRIER.
8. INSTALL 3-1/2 " LAYER OF BARK MULCH (PROVIDED BY THE CITY - INSTALLED BY THE CONTRACTOR) IN TREEWELL TO 1/2 INCH BELOW TOP OF SIDEWALK.
9. DEVELOPER OR CONTRACTOR SHALL WATER THE TREE AT TIME OF PLANTING AND SHALL BE RESPONSIBLE FOR THE CARE OF THE TREE UNTIL ALL IMPROVEMENTS ARE ACCEPTED BY THE CITY.
10. TREES SHALL BE PLACED A MINIMUM OF 8' FROM SEWER LATERALS AND WATER SERVICES AND A MINIMUM OF 20' FROM STREET LIGHTS AND DRIVEWAYS.
11. IRRIGATION SYSTEM TO BE PROVIDED PER CITY STANDARDS DRAWING NO. W-12 ON BACK-UP LOT FRONTAGES. ON COMMERCIAL FRONTAGES, IRRIGATION SYSTEM TO BE CONNECTED TO ON-SITE AUTOMATIC IRRIGATION SYSTEM.

| NO. | REVISED | BY |
|---|---|---|
| 1 | 08/02/02 | saf |

DRAWN BY: S. FOX
CHECKED BY: J. PODESTA
SCALE: NONE

# ARTERIAL TREE WELL STREET TREE PLANTING

CITY OF MANTECA
DEPARTMENT OF PUBLIC WORKS

APPROVED BY: Michael F. Brinton
DIRECTOR OF PUBLIC WORKS

DRAWING NO. ST-24
DATE: AUG. 1992

# CITY OF MANTECA APPROVED STREET TREE SPECIES

| COMMON NAME | BOTANICAL NAME | ~ HEIGHT |
|---|---|---|
| TRIDENT MAPLE | ACER BUERGERIANUM | 25' |
| CREPE MYRTLE | LAGERSTROMIA INDICA | 25' |
| SWAMP MYRTLE | TRISTANIA LAURINA "ELEGANT" | 25' |
| FLOWERING CHERRY | PRUNUS SERRALATA "KWANSAN" | 25' |
| FLOWERING CRABAPPLE | MALUS FLORIBUNDA | 25' |
| RED LEAF PLUM | PRUNUS BLIREIANA | 25' |
| GOLDEN RAIN TREE | KOELREUTERIA PANICALATA | 35' |
| CHINESE FLAME TREE | KOELREUTERIA BIPINNATA | 35' |
| CHINESE PISTACHE | PISTACHIA CHINENSIS | 50' |
| HOLLY OAK | QUERCUS ILEX | 50' |
| LITTLE LEAF LINDEN | TILIA CORDATA | 50' |
| HACKBERRY | CELTIS AUSTRALIS | 60' |
| EVERGREEN ELM | ULMUS PARIFOLIA SEMPERVIRENS | 60' |
| JAPANESE ZELKOVA | ZELKOVA SERRATA | 70' |
| DEODAR CEDAR | CEDRUS DEODARA | 80' |
| GINKGO | GINKGO BILOBA | 80' |
| TULIP TREE | LIRIODENDRON TULIPIFERA | 80' |

# CITY OF MANTECA PROHIBITED STREET TREE SPECIES

| COMMON NAME | BOTANICAL NAME |
|---|---|
| AMERICAN ELM | ULMUS AMERICANA |
| EUCALYPTUS | ALL EUCALYPTUS SPECIES |
| MODESTO ASH | ALL FRAXINUS SPECIES |
| MULBERRY | ALL MORUS SPECIES |
| RAYWOOD ASH | ALL FRAXINUS SPECIES |
| ORNAMENTAL PEAR | ALL PYRUS SPECIES |
| PALM | ALL PALM SPECIES |
| POPLAR | ALL POPULUS SPECIES |
| WILLOW | ALL SALIX SPECIES |

| NO. | REVISED | BY |
|---|---|---|
| 1 | 08/02/02 | saf |

DRAWN BY: S. FOX
CHECKED BY: J. PODESTA
SCALE: NONE

**STREET TREES**

CITY OF MANTECA
DEPARTMENT OF PUBLIC WORKS

APPROVED BY: Michael F. Brinton
DIRECTOR OF PUBLIC WORKS

DRAWING NO. ST-25
DATE: JAN. 1988

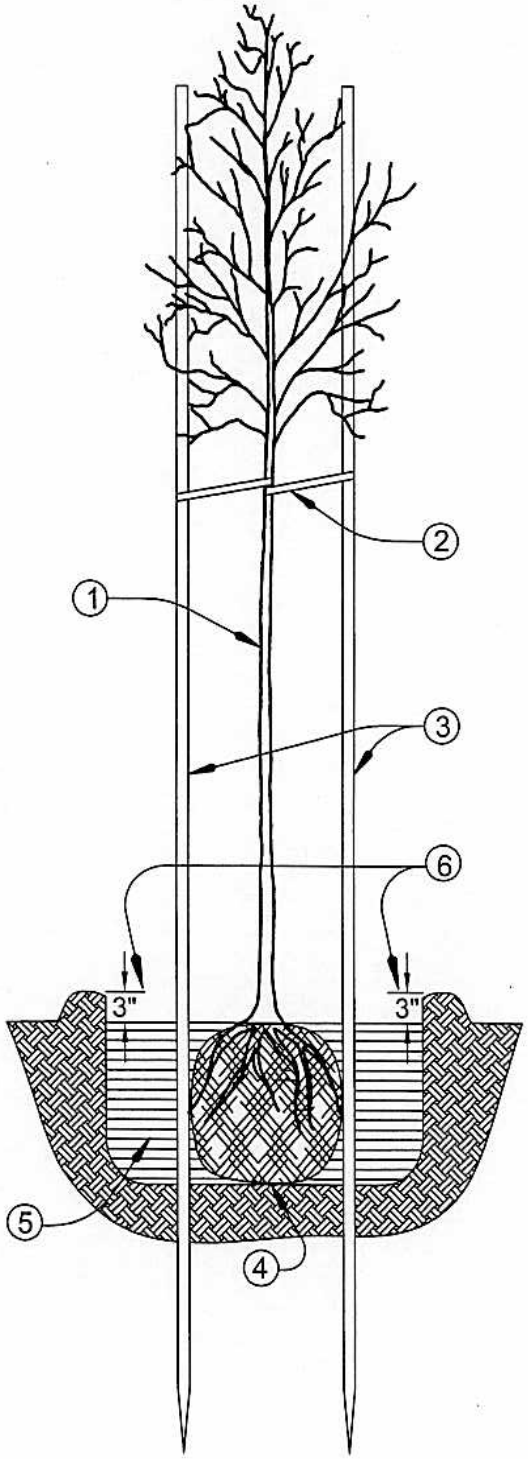


NOTES:

1. 15 GALLON TREE (VARIETY SPECIFIED BY THE PARKS AND RECREATION DEPARTMENT; SEE ST-25) MINIMUM SIZE REQUIREMENTS:
   (A) HEIGHT - 7 FEET
   (B) TRUNK CALIPER - 3/4 INCH DBH
   (C) PLANTING SITE LOCATION TO BE DETERMINED AND MARKED BY THE CITY URBAN FORESTRY DIVISION.
2. 1" VINYL TREE TAPE STRAPPING.
3. TREE STAKES: TWO - 2"X2"X8' REDWOOD OR 2" DIAMETER X 8' TREATED LODGEPOLE DRIVEN A MINIMUM OF 2 FEET INTO THE GROUND AND AT THE OUTSIDE EDGE OF THE ROOTBALL.
4. EXCAVATION TO BE TWICE AS WIDE AS ROOTBALL.
5. PLANTING SOIL SHALL BE NATIVE ONLY.
6. WATER BASIN 3" HIGH BERM ENCIRCLING THE ROOTBALL PERIMETER.
7. DEVELOPER OR CONTRACTOR SHALL WATER THE TREE AT TIME OF PLANTING AND SHALL BE RESPONSIBLE FOR CARE OF THE TREE UNTIL ALL IMPROVEMENTS ARE ACCEPTED BY THE CITY.
8. TREES SHALL BE PLACED A MINIMUM OF 8 FEET FROM SEWER LATERALS, WATER SERVICES AND ALL OTHER UNDERGROUND UTILITIES. A MINIMUM OF 3 FEET FROM SIDEWALKS AND A MINIMUM OF 20 FEET FROM DRIVEWAYS.
9. TREES SHALL BE LOCATED WITHIN THE "STREET TREE AREA", BUT NO CLOSER THAN 3 FEET FROM THE BACK OF SIDEWALK. PER MMC, CHAPTER 12.08, THE "STREET TREE AREA" IS THE AREA BETWEEN PUBLIC STREET RIGHT-OF-WAY LINES PLUS 5 FEET EACH SIDE THEREOF. CITY URBAN FORESTRY DIVISION STAFF WILL DETERMINE THE EXACT LATERAL PLACEMENT OF RESIDENTIAL STREET TREES BY MARKING CURB AREA IN DIRECT RELATION TO SITE. (TREES THAT ARE PLACED OUTSIDE OF THE "CITY RIGHT-OF-WAY" WILL NOT BE MAINTAINED BY CITY URBAN FORESTRY CREWS.)

| NO. | REVISED | BY |
|---|---|---|
| 1 | 08/02/02 | saf |

DRAWN BY: S. FOX
CHECKED BY: J. PODESTA
SCALE: NONE

# RESIDENTIAL STREET TREE PLANTING

CITY OF MANTECA
DEPARTMENT OF PUBLIC WORKS

APPROVED BY:
DIRECTOR OF PUBLIC WORKS

DRAWING NO. ST-26
DATE: FEB. 2002

NOTES:

1. STREET LIGHTS SHALL BE PLACED AT ALL INTERSECTING STREETS, AT THE END OF CUL-DE-SACS, AND EVENLY SPACED, SPACING DEPENDING ON BLOCK LENGTHS, WITH 240 FEET MAXIMUM BETWEEN LIGHTS OR AS DIRECTED BY THE CITY ENGINEER.
2. LUMINAIRE DISTRIBUTION PATTERN SHALL BE BASED ON THE ILLUMINATING ENGINEERING SOCIETY (I.E.S.) CODE FOR STREET AND HIGHWAY LIGHTING.
3. LUMINAIRE SHALL BE A MINIMUM OF 30 WATT, UNLESS OTHERWISE SPECIFIED BY THE CITY ENGINEER.
4. LUMINAIRE OPERATING VOLTAGE SHALL BE 120 VOLTS UNLESS OTHERWISE APPROVED BY THE CITY ENGINEER.
5. LUMINAIRE SHALL BE LIGHT EMITTING DIODE (LED) WITH 120/240 DUAL VOLTAGE BUILT IN BALLAST REACTOR TYPE, AND INDIVIDUAL PHOTOCELL CONTROL TYPE III.
6. LUMINAIRE SHALL HAVE CORRELATED COLOR TEMPERATURE (CCT) OF 4000° K (+/- 300° K); LUMINAIRE COLOR RENDERING INDEX (CRI) SHALL BE A MINIMUM OF 70; LUMINAIRE AND POWER SUPPLY SHALL OPERATE NORMALLY BETWEEN -20 DEG C TO 50 DEG C AMBIENT. LUMINAIRE COOLING SYSTEM SHALL CONSIST OF A HEAT SINK WITH NO FANS, PUMPS, OR LIQUIDS, AND SHALL BE RESISTANT TO DEBRIS BUILDUP THAT DOES NOT DEGRADE HEAT DISSIPATION PERFORMANCE. LUMINAIRE POWER SUPPLY SHALL HAVE A CLASS A SOUND RATING PER ANSI STANDARD C63.4, AND MAXIMUM DRIVER CURRENT SHALL NOT EXCEED 700 mA.
7. WIRING MAY BE OVERHEAD TO POLE IN REAR OF PROPERTY, THRU A SIDE YARD EASEMENT, WHERE PRIOR APPROVAL IS OBTAINED FROM THE CITY ENGINEER.
8. POLES SHALL BE GALVANIZED STEEL TAPERED TUBE OR ALUMINUM EQUAL.
9. FOUNDATIONS SHALL BE CAST IN PLACE OR EMBEDDED.
10. CONDUIT TO BE USED SHALL BE RIGID METAL OR SCHEDULE 40 PVC AND SHALL BE BURIED TO THE FOLLOWING DEPTH.
    A. WITHIN SIDEWALK OR PARKWAY AREAS: 2'-0" MIN.
    B. WITHIN ROADWAY AREAS: 3'-0" MIN.
11. THE UNDERGROUND CONDUIT AND ALL METAL PARTS SHALL BE CONTINUOUSLY BONDED AND GROUNDED.
12. MINIMUM RADIUS OF BENDS SHALL BE 18". ALL BENDS AND/OR OFFSETS SHALL BE MADE WITH FACTORY SECTIONS.
13. ALL SPLICES TO BE APPROVED SOLDERLESS WATERPROOF CONNECTORS OF PROPER SIZE.
14. ALL EMPTY CONDUITS SHALL BE CAPPED AND A 1/4" NYLON PULL ROPE PROVIDED INSIDE.
15. UNLESS OTHERWISE APPROVED BY THE CITY ENGINEER, A NO. 3-1/2 PULL BOX (STATE STD. ES-8) SHALL BE INSTALLED AT ALL STREET LIGHT STANDARDS. PULL BOXES SHALL NOT BE MORE THAN 250' APART ON LONG RUNS. COVERS SHALL BE INSCRIBED "STREET LIGHTING". UPON COMPLETION OF TESTING OF LIGHTS, ALL PULL BOXES SHALL HAVE A LAYER OF VISQUEEN PLACED OVER WIRES AND FILLED WITH LEAN CONCRETE TO JUST BELOW COVER TO PREVENT WIRE THEFT.
16. WATERPROOF FUSED SPLICED CONNECTORS SHALL BE INSTALLED IN THE BASE OF EACH LIGHT STANDARD AT THE HANDHOLE.

| LED LUMINAIRE | | | |
|---|---|---|---|
| STREET TYPE | LAMP WATTAGE | MAST ARM LENGTH (L) | POLE HEIGHT (H) |
| RESIDENTIAL (50' R/W) | 30 | 6'-0" | 28'-6" |
| COLLECTOR (60' R/W) | 60 | 6'-0" | 28'-6" |
| ARTERIAL (84' R/W) | 80 | 8'-0" | 32'-6" |

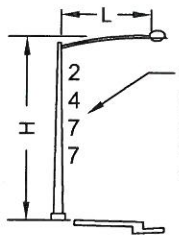


CONTRACTOR TO STENCIL 2" HIGH BLACK I.D. NO. ON STREET SIDE OF POLE 9' ABOVE BACK OF WALK. CITY TO PROVIDE I.D. NO.

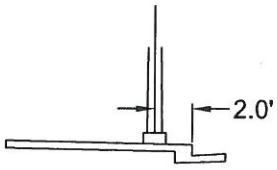


8' & 10' SIDEWALKS

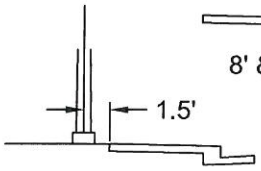


5' SIDEWALK

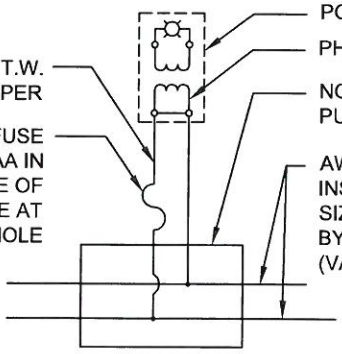


STREET LIGHT LOCATION

| NO. | REVISED | BY |
|---|---|---|
| 3 | JAN. 2014 | AM |

DRAWN BY: A MIJANGO
CHECKED BY: P. GOVEA
SCALE: NONE

# STREET LIGHT REQUIREMENTS

CITY OF MANTECA
DEPARTMENT OF PUBLIC WORKS

APPROVED BY: Mark Houghton
DIRECTOR OF PUBLIC WORKS

DRAWING NO. ST-27
DATE: JAN. 2014

APPROVED MANUFACTURERS

STEEL – UNION METAL MFG. CO.
AMERON POLE PRODUCTS
VALMONT INDUSTRIES

ALUMINUM – UNION METAL MFG. CO.
HAPCO CO.
PFAFF & KENDALL
KAISER

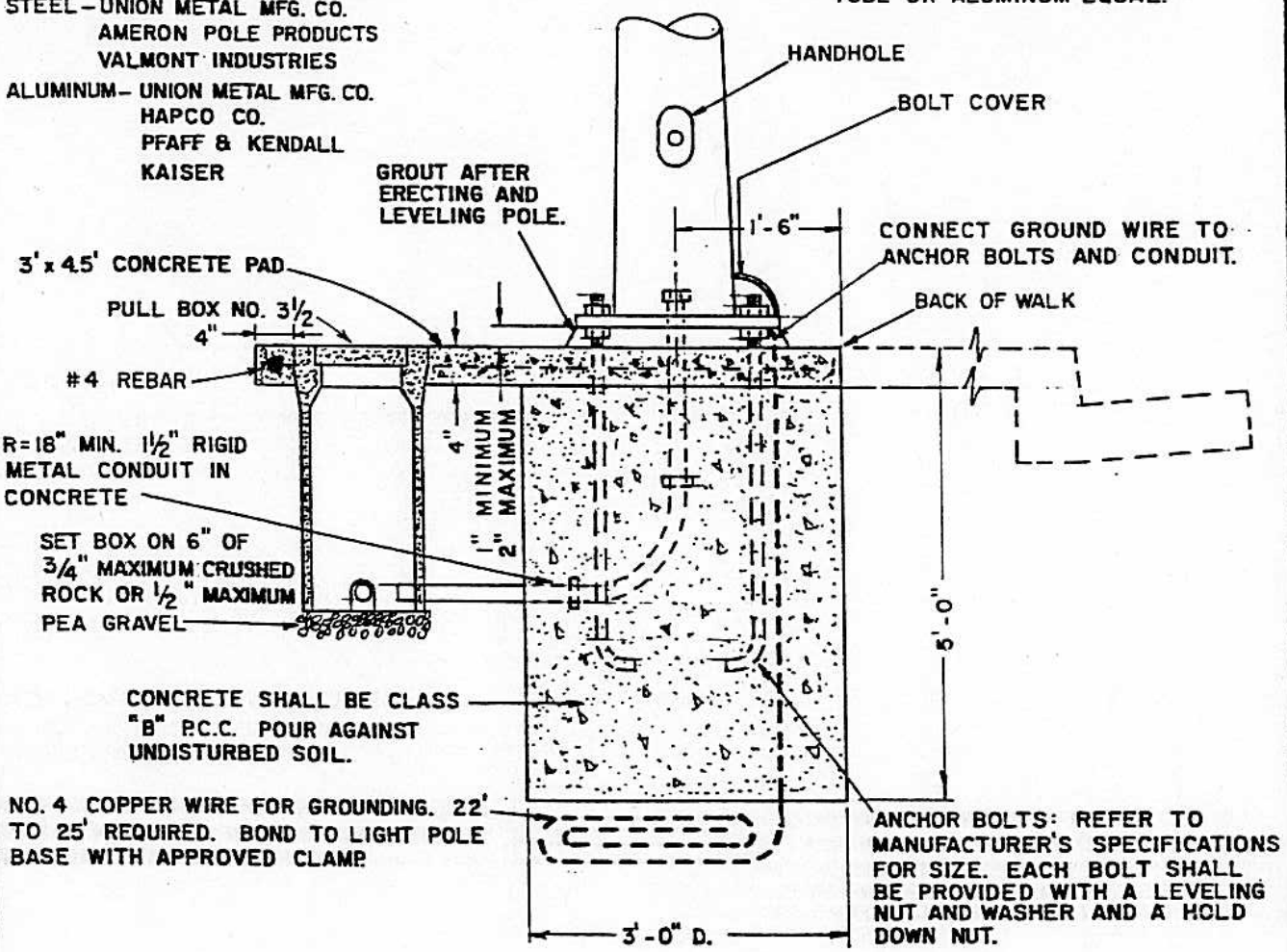


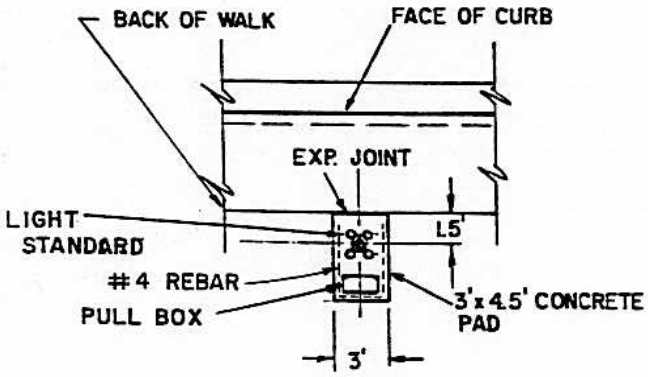


PLAN 5' SIDEWALK

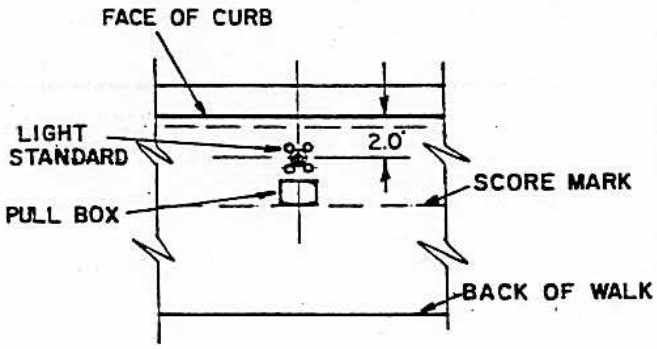


PLAN 10' SIDEWALK

| NO. | REVISED | BY |
|---|---|---|
| | | |

DRAWN BY: J. HULSEY
CHECKED BY: J. PODESTA
SCALE: NONE

# CAST-IN-PLACE CONCRETE FOOTING

CITY OF MANTECA
DEPARTMENT OF PUBLIC WORKS

APPROVED BY: M. Brinton
DIRECTOR OF PUBLIC WORKS

DRAWING NO. ST-28
DATE: JAN. 1988

PRINTED ON DIEPO NO 1000H CLEARPRINT

## NOTES

1. CAP: CAST IRON OR STEEL FURNISHED WITH SET SCREWS.
2. ARM: MIN. 11 GAUGE STEEL WITH A MIN. YIELD STRENGTH OF 33,000 P.S.I. CYLINDRICAL TAPER SHALL BE 0.14 IN./FT. SMALL END O.D. SHALL BE 2.37 IN. LARGER END SHALL BE OVAL WITH A 2.5 ± IN. CROSS-SECTION HORIZONTAL DIMENSION.
3. POLE: MIN. 11 GAUGE STEEL WITH A MIN. YIELD STRENGTH OF 33,000 P.S.I. POLE SHALL BE CYLINDRICAL WITH A TAPER OF 0.14 IN/FT.
4. HANDHOLE: 4 IN. x 6.5 IN. HOLE WITH A WELDED REINFORCED FRAME. COVER AND MOUNTING HARDWARE SHALL BE FURNISHED.
5. WELDNUT: WELD 0.5 IN. SQUARE GROUNDING NUT OR NUT HOLDER INSIDE POLE DIRECTLY OPPOSITE HANDHOLE.
6. GROUND LINE SLEEVE: MIN. 11 GAUGE STEEL CONTINUOUS SEAL-WELD AT TOP AND BOTTOM TO POLE.
7. CABLE ENTRANCE: 2 IN. x 6 IN. OVAL SLOT OPPOSITE SIDE OF POLE LUMINAIRE.
8. FINISH: ALL PARTS SHALL BE GALVANIZED AFTER FORMING AND WELDING. ARM AND POLE PER A.S.T.M. A-123. REMOVABLE PARTS PER A.S.T.M. A-153.

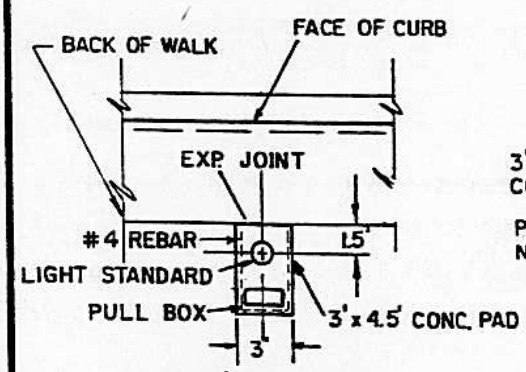


PLAN 5' SIDEWALK

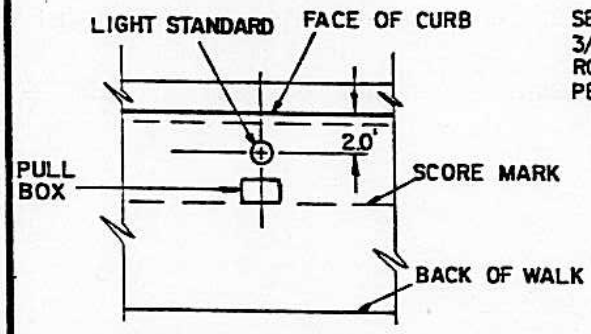


PLAN 10' SIDEWALK

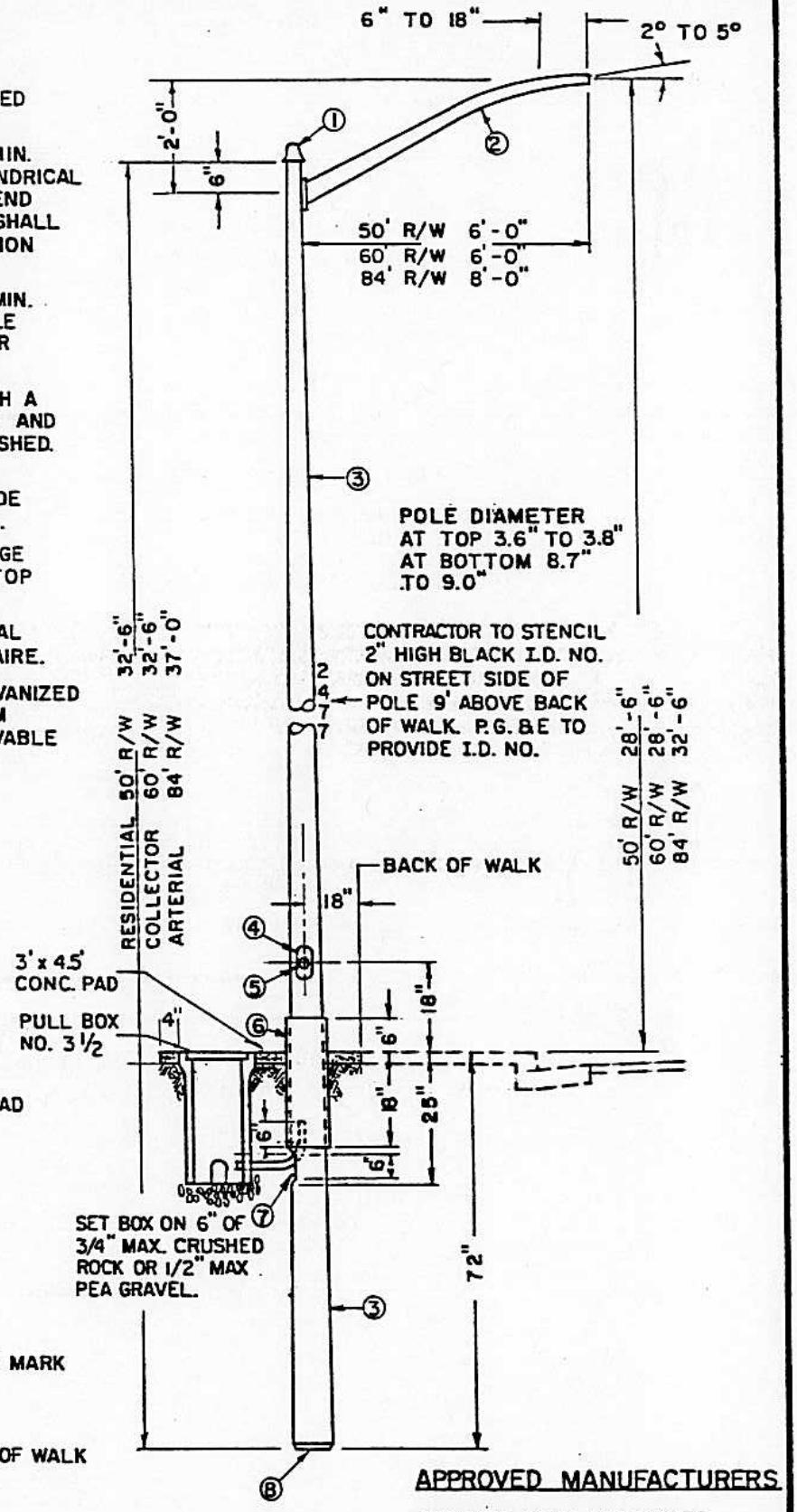


### APPROVED MANUFACTURERS

AMERON POLE PRODUCTS
UNION METAL MFG. CO.
VALMONT INDUSTRIES

| NO. | REVISED | BY |
|---|---|---|
| | | |

DRAWN BY: J. HULSEY
CHECKED BY: J. PODESTA
SCALE: NONE

# EMBEDDED STEEL POLES FOR STREET LIGHTING

CITY OF MANTECA
DEPARTMENT OF PUBLIC WORKS

APPROVED BY: M. Brinton
DIRECTOR OF PUBLIC WORKS

DRAWING NO. ST-29
DATE: JAN. 1988

PRINTED ON DIEPO NO 1000H CLEARPRINT

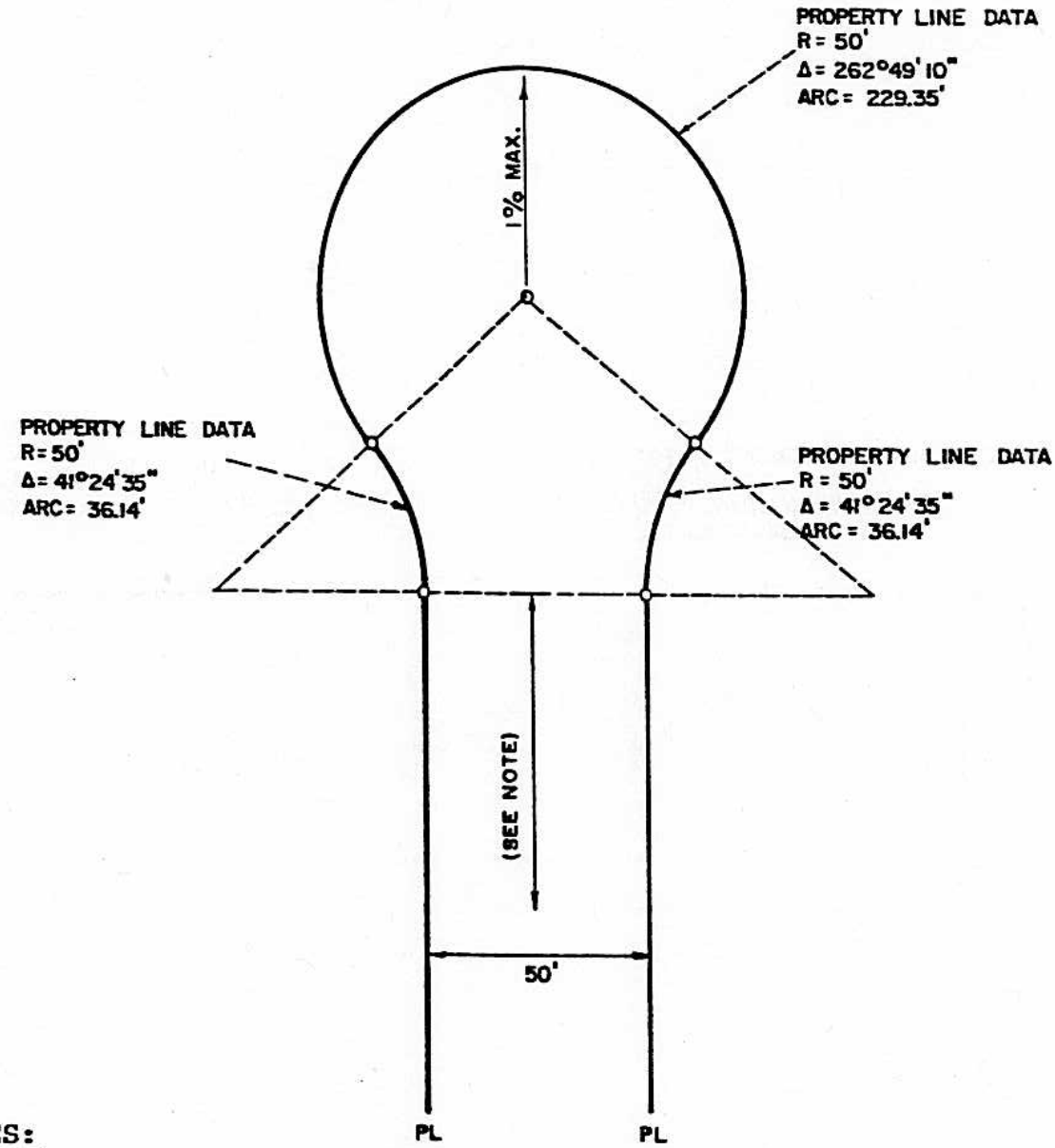


**NOTES:**

1. CUL-DE-SACS SHALL NOT BE MORE THAN 600 FEET NOR LESS THAN 150 FEET IN LENGTH, EXCEPT WHERE SPECIAL CIRCUMSTANCES OF DESIGN ARE APPARENT AND SHALL TERMINATE WITH A TURN-AROUND WITH A RADIUS OF NOT LESS THAN FIFTY FEET (50'). FACE OF CURB RADIUS IS 43 FEET.

2. BULB MAY BE OFFSET TO EITHER SIDE.

3. GUTTER SLOPE AROUND CUL-DE-SAC SHALL BE 0.0025 FT./FT. MINIMUM.

4. 1% MAXIMUM SLOPE AT BACK OF CUL-DE-SAC (IF HIGH POINT IS AT BACK).

| NO. | REVISED | BY | | |
|---|---|---|---|---|
| 1 | JAN. 1988 | JK | **STANDARD CUL-DE-SAC** | APPROVED BY: M. Brinton, DIRECTOR OF PUBLIC WORKS |
| DRAWN BY: D. KIRKMAN | | | | |
| CHECKED BY: J. PODESTA | | | CITY OF MANTECA, DEPARTMENT OF PUBLIC WORKS | DRAWING NO. ST-30 |
| SCALE: NONE | | | | DATE: JAN. 1988 |

PRINTED ON DIEPO NO. 1000H CLEARPRINT

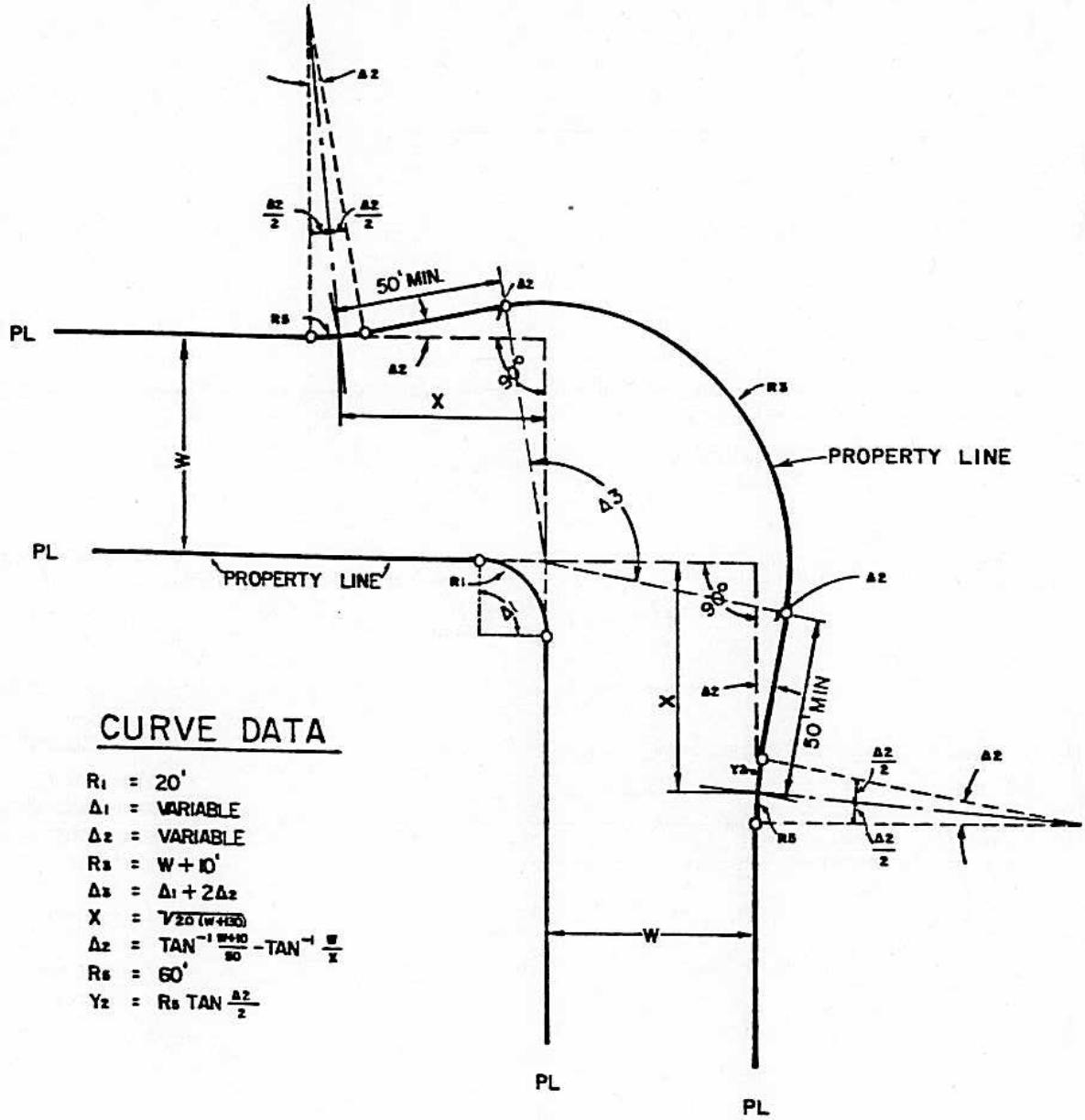


## CURVE DATA

$R_1$ = 20'
$\Delta_1$ = VARIABLE
$\Delta_2$ = VARIABLE
$R_3$ = W + 10'
$\Delta_3$ = $\Delta_1 + 2\Delta_2$
X = $\sqrt{20(W+20)}$
$\Delta_2$ = $\tan^{-1}\frac{W+10}{90} - \tan^{-1}\frac{W}{X}$
$R_5$ = 60'
$Y_2$ = $R_5 \tan\frac{\Delta_2}{2}$

| W | X | Δ2 |
|---|---|---|
| 50' | 60' | 10° 23' 20" |
| 60' | 61.64' | 10° 14' 11" |

**NOTES:**

1. INTERSECTION BULBS ARE NOT REQUIRED ON STREETS WITH A CENTERLINE RADIUS OF 200' OR MORE.

| NO. | REVISED | BY |
|---|---|---|
| 1 | JAN. 1988 | JK |

DRAWN BY: D. KIRKMAN
CHECKED BY: J. PODESTA
SCALE: NONE

# ALIGNMENT FOR 90° STREET INTERSECTIONS

CITY OF MANTECA
DEPARTMENT OF PUBLIC WORKS

APPROVED BY: M. Brinton
DIRECTOR OF PUBLIC WORKS

DRAWING NO. ST-31
DATE: JAN. 1988

PRINTED ON DIEPO NO. 1000H CLEARPRINT

1. THE MINIMUM HEIGHT OF THE SOUND AND SAFETY/SOUND BARRIER WALL SHALL BE EIGHT (8) FEET MEASURED FROM THE ROADWAY ELEVATION AT THE CENTERLINE OF THE NEAREST TRAVEL LANE, OR FROM THE CENTERLINE OF THE NEAREST FUTURE TRAVEL LANE. THIS STANDARD SHALL ACHIEVE AN ACCEPTABLE OUTDOOR RESIDENTIAL Ldn (DAY-NIGHT WEIGHTED AVERAGE NOISE LEVEL) VALUE OF 65 dB (DECIBELS) OR LESS, AND AN INDOOR RESIDENTIAL Ldn VALUE OF 45 dB OR LESS, IN ANY HABITABLE ROOM WITH THE WINDOWS CLOSED.

2. THE DEVELOPER SHALL SUBMIT TO THE PLANNING DEPARTMENT AN ACOUSTICS ENGINEER'S REPORT INDICATING SOUND ATTENUATION VALUES AND SOUND BARRIER DESIGN, FOR EVALUATION DURING THE FINAL MAP REVIEW PROCESS. IF REQUIRED BY THE CITY, A SAFETY/SOUND BARRIER WALL DESIGN SHALL BE SUBSTITUTED FOR THE SOUND BARRIER DESIGN. THE CONSTRUCTION OF THE BARRIER WALL SHALL BE INCORPORATED WITH CONSTRUCTION OF THE SUBDIVISION IMPROVEMENTS. IF APPROVED BY THE CITY, ADJACENT PROJECTS MAY UTILIZE THE SAME REPORT AND DESIGN.

3. THE SOUND BARRIER AND THE TOP PORTION OF THE SAFETY/SOUND BARRIER WALL SHALL BE CONSTRUCTED OF SOLID NONPOROUS MATERIAL WITH A MASS VALUE OF AT LEAST FOUR (4) POUNDS PER SQUARE FOOT. ALL JOINTS SHALL BE SEALED TO PREVENT THE PASSAGE OF SOUND WAVES.

4. THE SOUND BARRIER AND THE TOP PORTION OF THE SAFETY/SOUND BARRIER WALL SHALL BE CONSTRUCTED OF EITHER CONCRETE PANEL-LOCK, BRICK, CONCRETE BLOCK OR PREFAB TILT-UP.

5. EMERGENCY ACCESS PANELS SHALL BE INSTALLED IN ACCORDANCE WITH CALIFORNIA DEPARTMENT OF TRANSPORTATION REQUIREMENTS.

6. THE OVERALL HEIGHT OF THE BARRIER WALL MAY BE ACHIEVED IN COMBINATION WITH AN EARTH BERM (SUBJECT TO APPROVAL BY THE CITY).

7. RESIDENTIAL LOTS ADJACENT TO THE NOISE GENERATING SOURCE SHALL HAVE A REAR YARD SETBACK OF 30 FEET.

8. DESIGN DETAILS, SIGNED AND STAMPED BY A REGISTERED CIVIL ENGINEER AND A MANUFACTURE'S DESCRIPTION OF THE PROPOSED WALL, SHALL BE MADE PART OF THE SUBDIVISION IMPROVEMENT PLANS AND SUBMITTED PRIOR TO APPROVAL OF THE FINAL MAP. DESIGN OF THE SAFETY/SOUND BARRIER WALL SHALL BE APPROVED BY THE ENGINEER.

| NO. | REVISED | BY |
|---|---|---|
| | | |

DRAWN BY: J. KOESTER

CHECKED BY: J. PODESTA

SCALE: NONE

**SOUND WALL DESIGN CRITERIA**

CITY OF MANTECA
DEPARTMENT OF PUBLIC WORKS

APPROVED BY: Michael H. Brinton
DIRECTOR OF PUBLIC WORKS

DRAWING NO. ST-32

DATE: JAN. 1988

PRINTED ON DIEPO NO 1000H CLEARPRINT

ALL MASONRY WALLS SHALL BE REINFORCED, SOLID GROUT FILLED AND CONSTRUCTED AT THE SITE (NO PREFABRICATED WALLS.) THE CITY SHALL HAVE THE RIGHT TO APPROVE WALL DESIGN, MASONRY BLOCK STYLE, AND COLOR.

## SOUND BARRIER

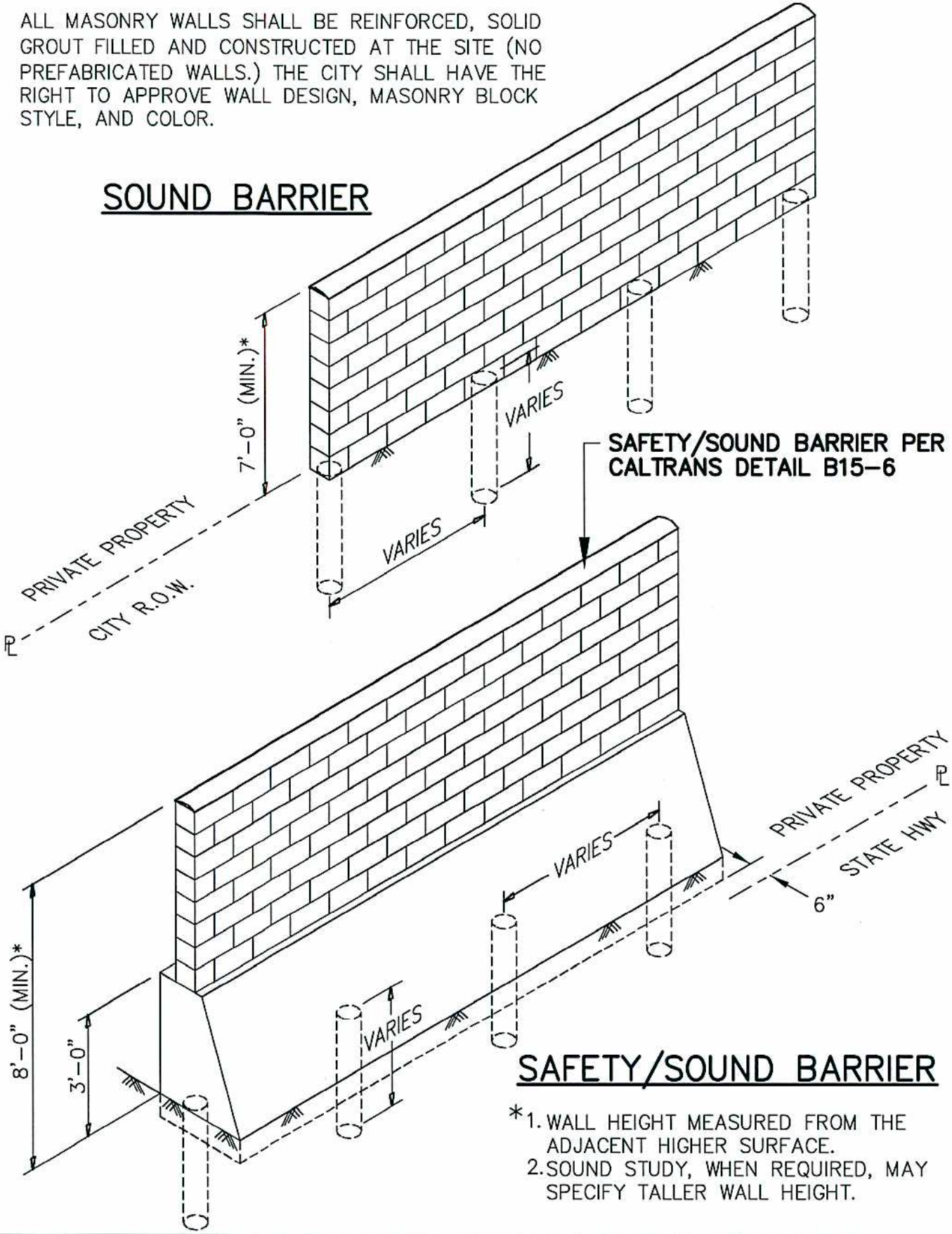


## SAFETY/SOUND BARRIER

*1. WALL HEIGHT MEASURED FROM THE ADJACENT HIGHER SURFACE.
2. SOUND STUDY, WHEN REQUIRED, MAY SPECIFY TALLER WALL HEIGHT.

| NO. | REVISED | BY |
|---|---|---|
| 2 | 7/5/2006 | JR |

DRAWN BY: J. KOESTER
CHECKED BY: J. PODESTA
SCALE: NONE

**SOUND WALLS**

CITY OF MANTECA
DEPARTMENT OF PUBLIC WORKS

APPROVED BY: Michael F. Brandow
DIRECTOR OF PUBLIC WORKS

DRAWING NO. ST-33
DATE: JAN. 1988

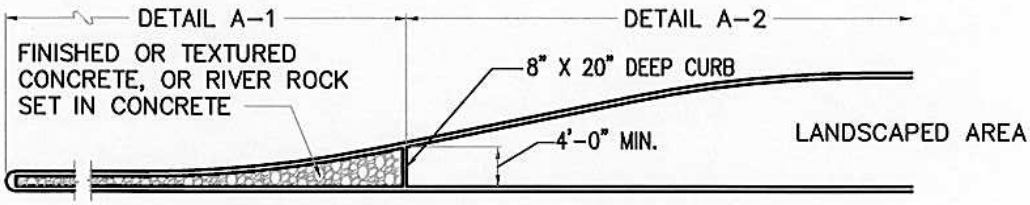


RAISED CONCRETE TRAFFIC MEDIAN

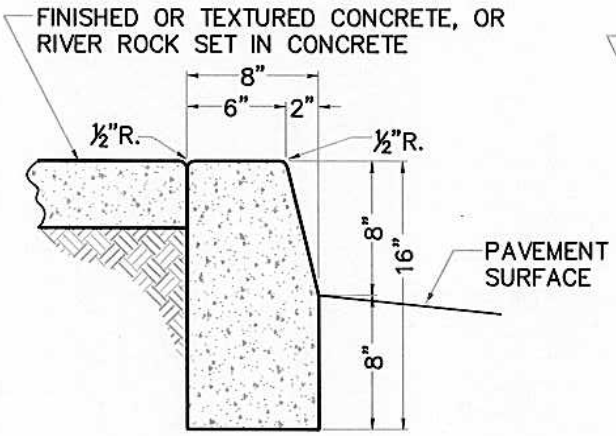


DETAIL A-1
CURB WITH CONCRETE BACKING

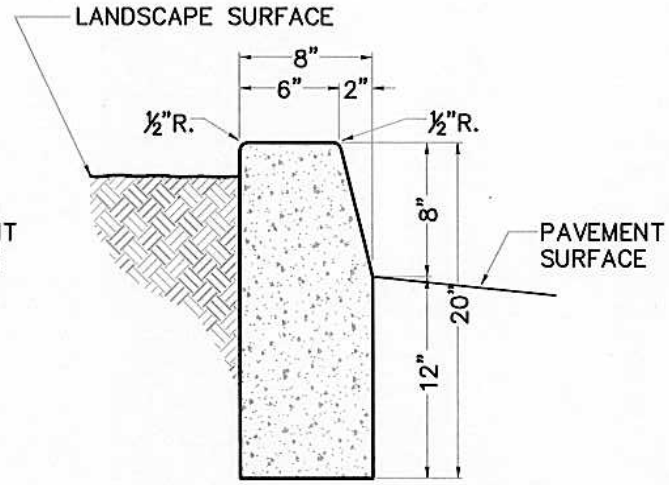


DETAIL A-2
CURB FOR LANDSCAPED AREAS

## NOTES:

1. EXPANSION JOINTS – MATERIAL SHALL BE ½" EXPANSION PAPER PLACED ¼" BELOW GRADE MAXIMUM 32'-0" ON CENTER AND AT RADIUS RETURNS.
2. WEAKENED PLANE JOINTS – ¼" WIDE X 1¼" DEEP SHALL BE PLACED MIDWAY BETWEEN EXPANSION JOINTS, 32'-0" MAXIMUM ON CENTER.
3. REFER TO CITY STANDARD SPECIFICATION SECTION 73, "CONCRETE CURBS AND SIDEWALKS".

| NO. | REVISED | BY |
|---|---|---|
| | | |

DRAWN BY: J. HULSEY
CHECKED BY: J. PODESTA
SCALE: NOT TO SCALE

**TRAFFIC MEDIAN CURBS**

CITY OF MANTECA
DEPARTMENT OF PUBLIC WORKS

APPROVED BY: Michael F. Brinton
DIRECTOR OF PUBLIC WORKS

DRAWING NO. ST-34
DATE: NOV. 2004

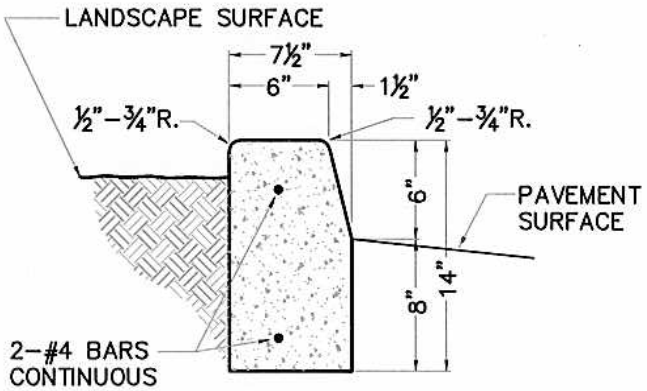


DETAIL 1
CURB FOR LANDSCAPED AREAS

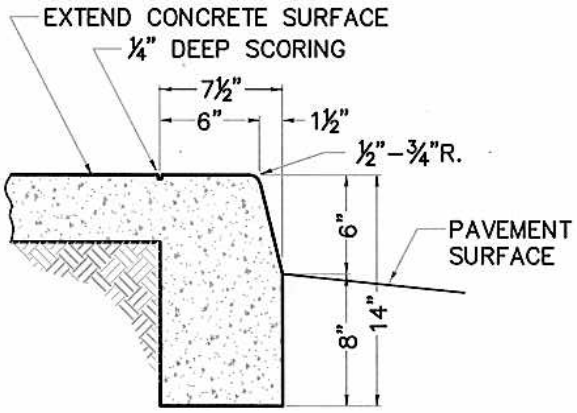


DETAIL 2
CURB WITH CONCRETE BACKING

## NOTES:

1. EXPANSION JOINTS – MATERIAL SHALL BE ½" EXPANSION PAPER PLACED ¼" BELOW GRADE MAXIMUM 32'–0" ON CENTER AND AT RADIUS RETURNS.
2. WEAKENED PLANE JOINTS – ¼" WIDE X 1¼" DEEP SHALL BE PLACED MIDWAY BETWEEN EXPANSION JOINTS, 32'–0" MAXIMUM ON CENTER.
3. REFER TO CITY STANDARD SPECIFICATION SECTION 73, "CONCRETE CURBS AND SIDEWALKS".

| NO. | REVISED | BY |
|---|---|---|
| | | |

DRAWN BY: J. HULSEY
CHECKED BY: J. PODESTA
SCALE: NOT TO SCALE

**PARKING AREA CURBS**

CITY OF MANTECA
DEPARTMENT OF PUBLIC WORKS

APPROVED BY: Michael A. Brinton
DIRECTOR OF PUBLIC WORKS

DRAWING NO. **ST-35**
DATE: NOV. 2004

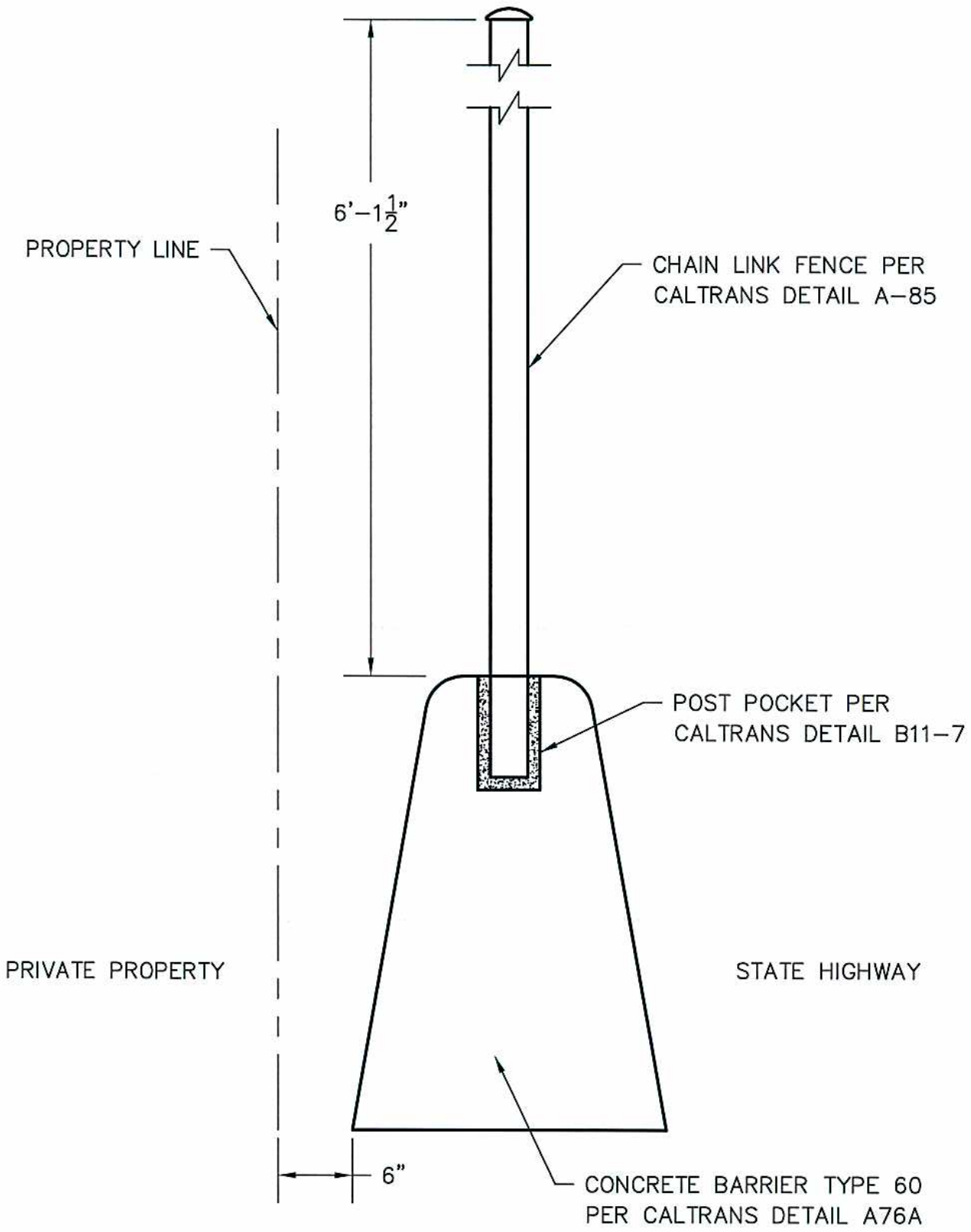


| NO. | REVISED | BY |
|---|---|---|
| | | |

DRAWN BY: J. ROSS
CHECKED BY: F. CLARK
SCALE: NONE

**HIGHWAY BARRIER WITH CHAIN-LINK FENCE**

CITY OF MANTECA
DEPARTMENT OF PUBLIC WORKS

APPROVED BY: Michael H. Brunton
DIRECTOR OF PUBLIC WORKS

DRAWING NO. **ST-36**
DATE: JUN. 2006

Filespec: e:\autocad\standard\ST-36

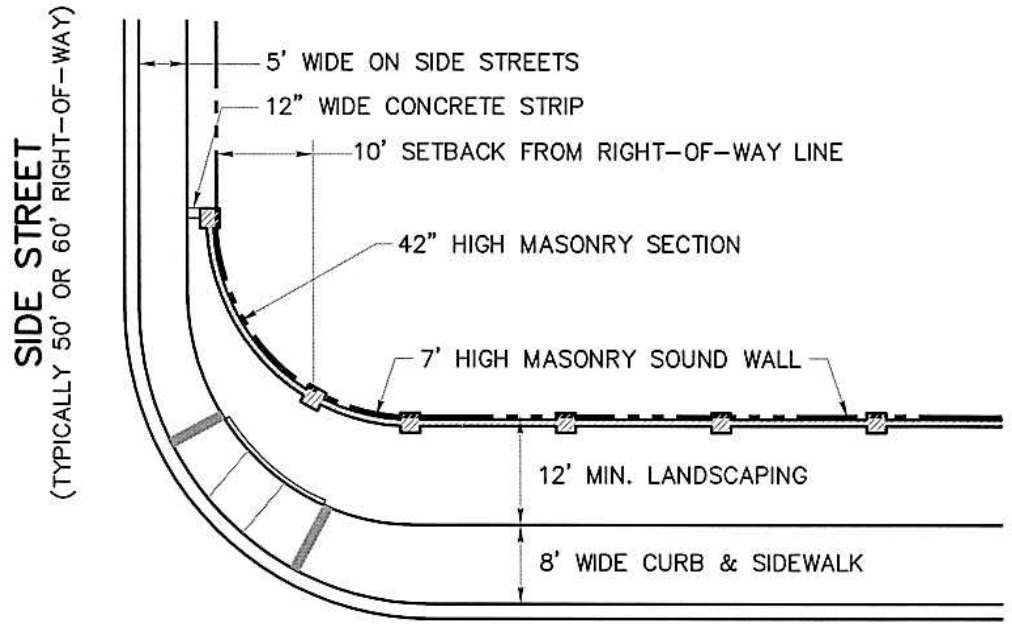


ARTERIAL STREET

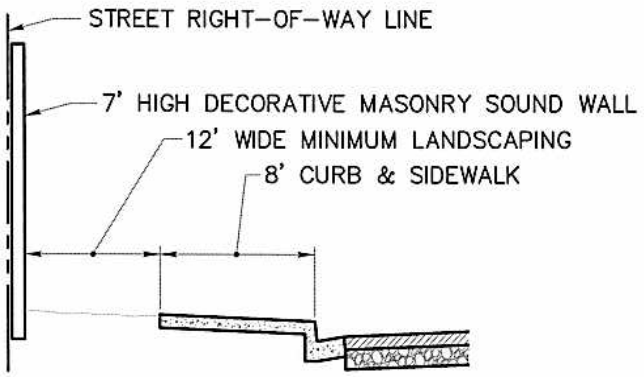


## NOTES:

1. THE ARTERIAL MASONRY SOUND WALL SHALL BE A MINIMUM SEVEN FEET HIGH, MEASURED FROM THE HIGH GROUND SIDE OF THE WALL.
2. THE 7-FOOT HIGH MASONRY SOUND WALL SHALL TERMINATE TEN FEET BACK FROM THE PROJECTED SIDE STREET RIGHT-OF-WAY LINE. A 42-INCH HIGH MASONRY WALL SHALL CONTINUE TO THE RADIUS RETURN OF THE SIDE STREET.
3. THE TOP OF THE MASONRY SOUND WALL SHALL BE FINISHED WITH A COORDINATING DECORATIVE CAP.
4. CHANGES IN THE MASONRY SOUND WALL DESIGN MAY ONLY OCCUR AT AN INTERSECTION WITH ANOTHER ARTERIAL STREET, AN EXPRESSWAY OR HIGHWAY, UNLESS OTHERWISE APPROVED BY THE COMMUNITY DEVELOPMENT DEPARTMENT DIRECTOR.
5. THE FIRST DEVELOPMENT TO INCLUDE CONSTRUCTION OF THE MASONRY SOUND WALL AND ARTERIAL STREETSCAPE SHALL "SET" THE DESIGN THEME TO BE MAINTAINED ALONG THE ARTERIAL STREET UNTIL ALTERED AT AN ALLOWED ROADWAY INTERSECTION.
6. THE STREETSCAPE ALONG THE WALL SHALL CONTINUE AROUND THE RADIUS RETURN AND TERMINATE WITH A 12-INCH WIDE CONCRETE CURB LEVEL WITH AND PERPENDICULAR TO THE SIDEWALK.
7. THE LANDSCAPE PLAN AND IRRIGATION SYSTEM SHALL BE APPROVED BY PARKS AND RECREATION AND COMMUNITY DEVELOPMENT DEPARTMENT DIRECTORS.
8. THE SAME ARTERIAL STREETSCAPE AND WALL DESIGN THEME SHALL EXTEND ALONG THE FRONTAGE OF A FORMAL STREET ENTRANCE INTO A NEIGHBORHOOD DEVELOPMENT OR COMMUNITY WHERE RESIDENTIAL REVERSE FRONTAGE LOTS ARE UTILIZED.

| NO. | REVISED | BY |
|---|---|---|
| | | |

DRAWN BY: J. HULSEY
CHECKED BY: K. KOLLAR
SCALE: NOT TO SCALE

**ARTERIAL STREETSCAPE CRITERIA "A"**

CITY OF MANTECA
DEPARTMENT OF PUBLIC WORKS

APPROVED BY:
DIRECTOR OF PUBLIC WORKS

DRAWING NO. **ST-37**
DATE: AUG., 2004

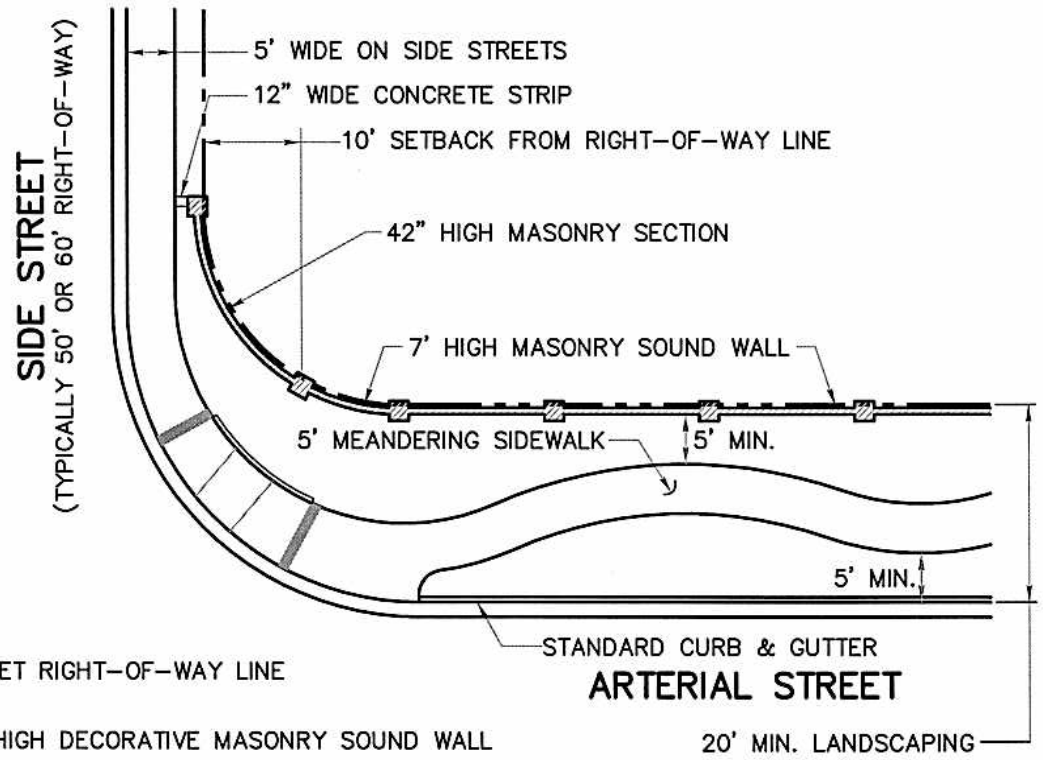


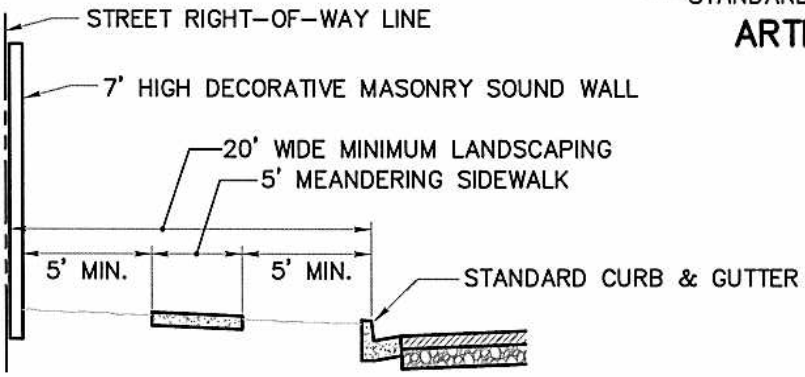


## NOTES:

1. THE ARTERIAL MASONRY SOUND WALL SHALL BE A MINIMUM SEVEN FEET HIGH, MEASURED FROM THE HIGH GROUND SIDE OF THE WALL.
2. THE 7-FOOT HIGH MASONRY SOUND WALL SHALL TERMINATE TEN FEET BACK FROM THE PROJECTED SIDE STREET RIGHT-OF-WAY LINE. A 42-INCH HIGH MASONRY WALL SHALL CONTINUE TO THE RADIUS RETURN OF THE SIDE STREET.
3. THE TOP OF THE MASONRY SOUND WALL SHALL BE FINISHED WITH A COORDINATING DECORATIVE CAP.
4. CHANGES IN THE MASONRY SOUND WALL DESIGN MAY ONLY OCCUR AT AN INTERSECTION WITH ANOTHER ARTERIAL STREET, AN EXPRESSWAY OR HIGHWAY, UNLESS OTHERWISE APPROVED BY THE COMMUNITY DEVELOPMENT DEPARTMENT DIRECTOR.
5. THE FIRST DEVELOPMENT TO INCLUDE CONSTRUCTION OF THE MASONRY SOUND WALL AND ARTERIAL STREETSCAPE SHALL "SET" THE DESIGN THEME TO BE MAINTAINED ALONG THE ARTERIAL STREET UNTIL ALTERED AT AN ALLOWED ROADWAY INTERSECTION.
6. THE STREETSCAPE ALONG THE WALL SHALL CONTINUE AROUND THE RADIUS RETURN AND TERMINATE WITH A 12-INCH WIDE CONCRETE CURB LEVEL WITH AND PERPENDICULAR TO THE SIDEWALK.
7. THE LANDSCAPE PLAN AND IRRIGATION SYSTEM SHALL BE APPROVED BY PARKS AND RECREATION AND COMMUNITY DEVELOPMENT DEPARTMENT DIRECTORS.
8. THE SAME ARTERIAL STREETSCAPE AND WALL DESIGN THEME SHALL EXTEND ALONG THE FRONTAGE OF A FORMAL STREET ENTRANCE INTO A NEIGHBORHOOD DEVELOPMENT OR COMMUNITY WHERE RESIDENTIAL REVERSE FRONTAGE LOTS ARE UTILIZED.

| NO. | REVISED | BY |
|---|---|---|
| | | |

DRAWN BY: J. HULSEY
CHECKED BY: K. KOLLAR
SCALE: NOT TO SCALE

# ARTERIAL STREETSCAPE CRITERIA "B"

CITY OF MANTECA
DEPARTMENT OF PUBLIC WORKS

APPROVED BY: Michael F. Brunton
DIRECTOR OF PUBLIC WORKS

DRAWING NO. ST-38
DATE: AUG., 2004

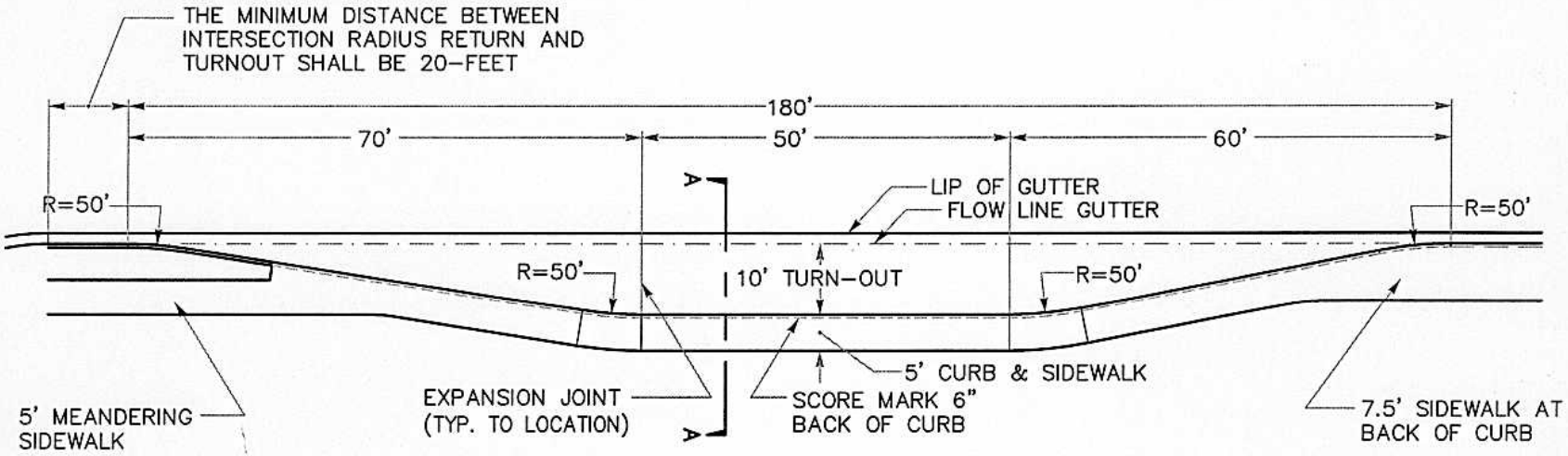


## PLAN VIEW

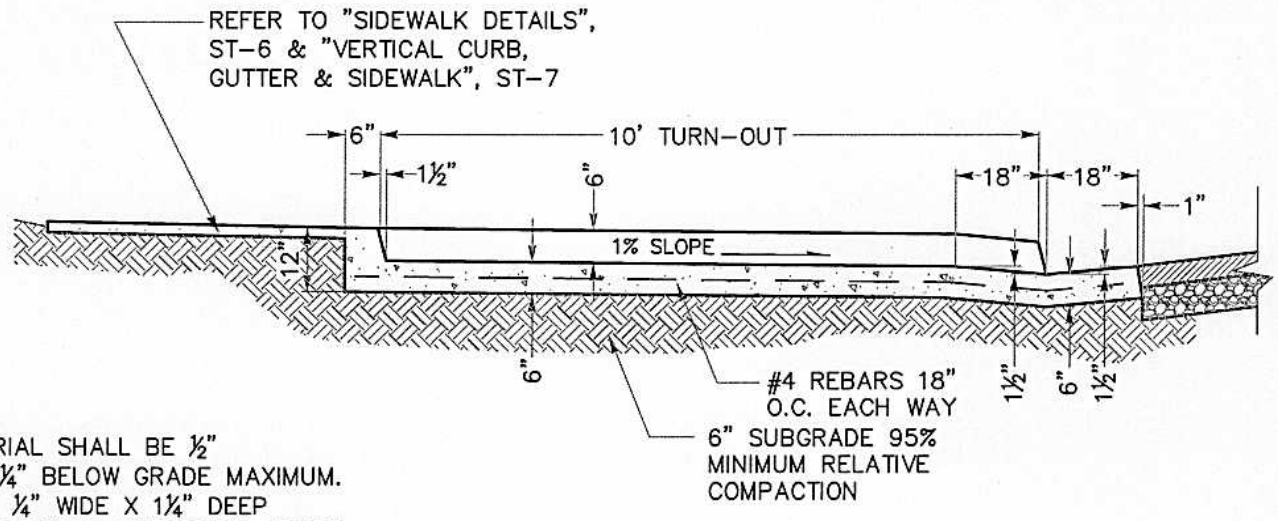


## SECTION A-A

NOTES:

1. EXPANSION JOINTS – MATERIAL SHALL BE ½" EXPANSION PAPER PLACED ¼" BELOW GRADE MAXIMUM.
2. WEAKENED PLANE JOINTS – ¼" WIDE X 1¼" DEEP SHALL BE PLACED MIDWAY BETWEEN EXPANSION JOINTS, 32'-0" MAXIMUM ON CENTER.
3. REFER TO CITY STANDARD SPECIFICATION SECTION 73, "CONCRETE CURBS AND SIDEWALKS".

| NO. | REVISED | BY |
|---|---|---|

DRAWN BY: J. HULSEY
CHECKED BY: J. PODESTA
SCALE: NOT TO SCALE

**BUS/LANDSCAPE MAINTENANCE TURNOUT**

CITY OF MANTECA
DEPARTMENT OF PUBLIC WORKS

APPROVED BY: DIRECTOR OF PUBLIC WORKS

DRAWING NO. **ST-39**
DATE: AUG. 2006

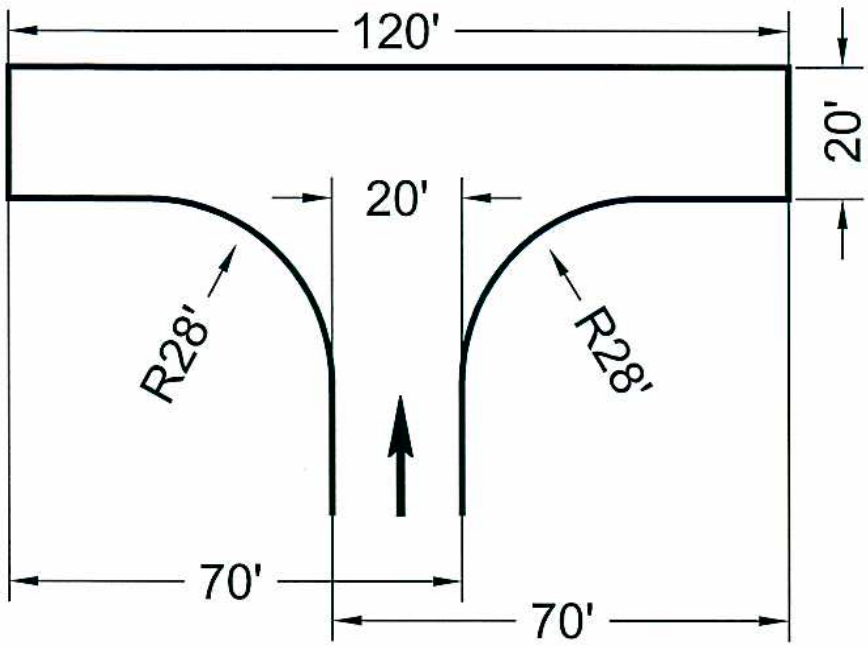


OPTION 1

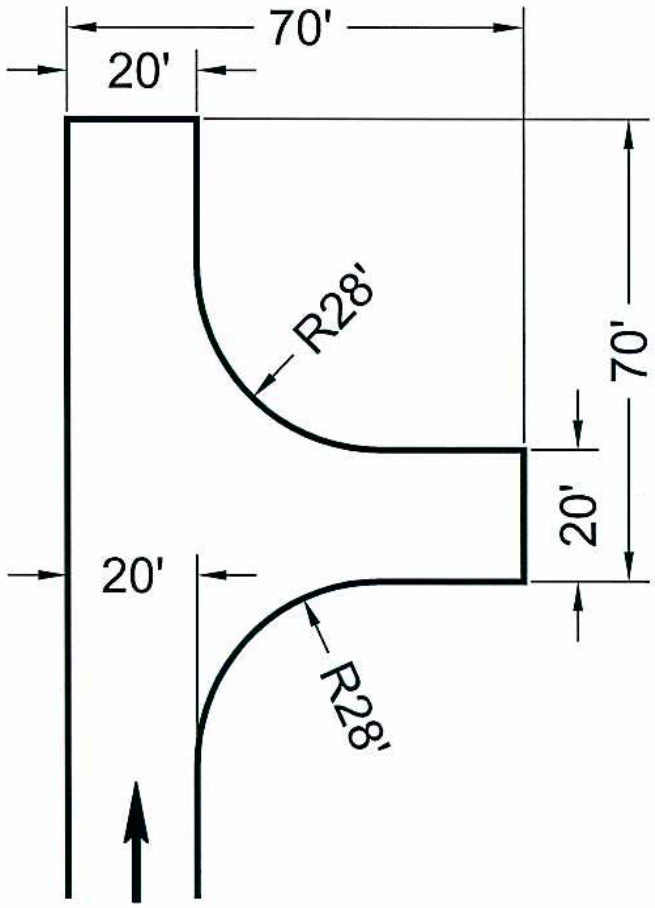


OPTION 2

| NO. | REVISED | BY |
|---|---|---|
| | | |

DRAWN BY: J. HULSEY

CHECKED BY: J. PODESTA

SCALE: NONE

# EMERGENCY VEHICLE & REFUSE TRUCK TURN AROUND

CITY OF MANTECA
DEPARTMENT OF PUBLIC WORKS

APPROVED BY: Michael A. Brandon
DIRECTOR OF PUBLIC WORKS

DRAWING NO. ST-40

DATE: July, 2006

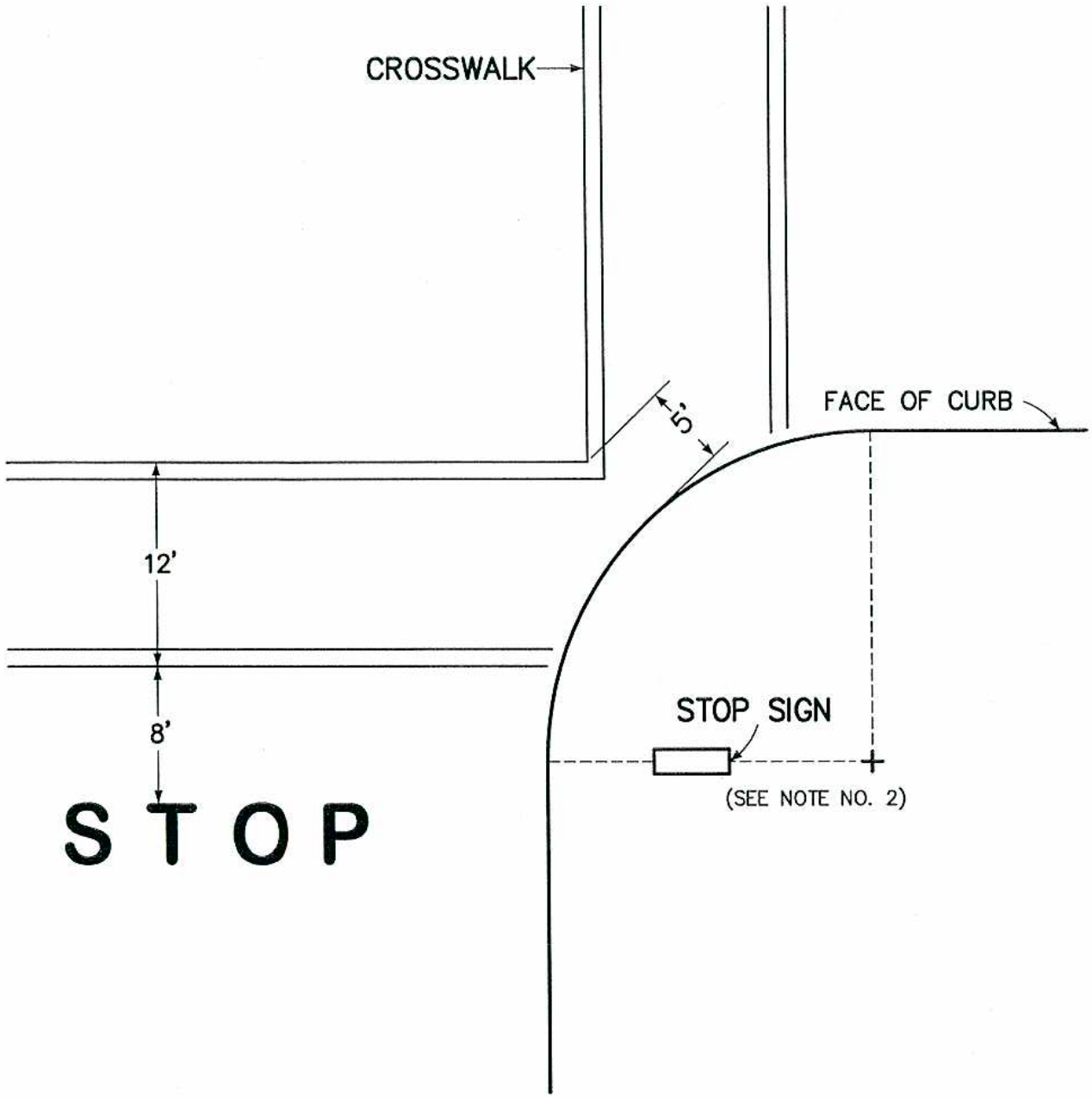


NOTES:

1. AN INTERSECTION NOT REQUIRING CROSSWALKS SHALL HAVE A STOP BAR PLACED IN THE SAME LOCATION AS THE CROSSWALK LINE CLOSEST TO THE LEGEND.

2. STOP SIGN INSTALLATION SHALL BE AT THE BACK OF WALK AT THE CURB RETURN OR AS DIRECTED BY THE CITY ENGINEER.

| NO. | REVISED | BY |
|---|---|---|
| | | |

DRAWN BY: J. KOESTER
CHECKED BY: J. PODESTA
SCALE: 1" = 10'

**CROSSWALK/STOP BAR PLACEMENT**

CITY OF MANTECA
DEPARTMENT OF PUBLIC WORKS

APPROVED BY: Michael F. Drueton
DIRECTOR OF PUBLIC WORKS

DRAWING NO. **ST-41**
DATE: SEPT. 1988

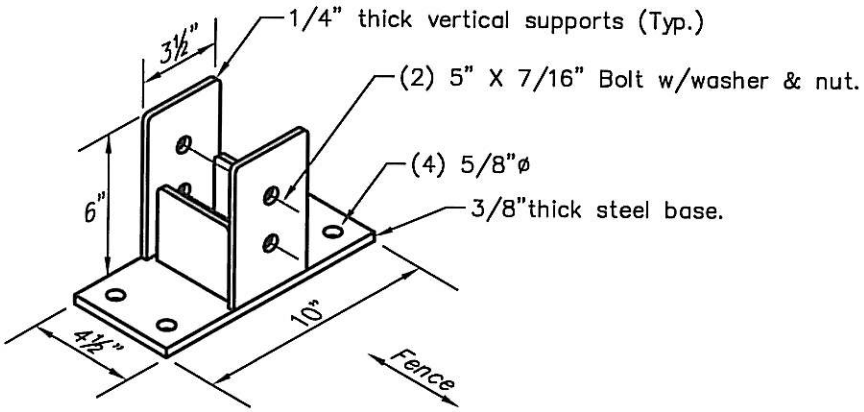


POST BASE (N.T.S.)

## DETAIL 1

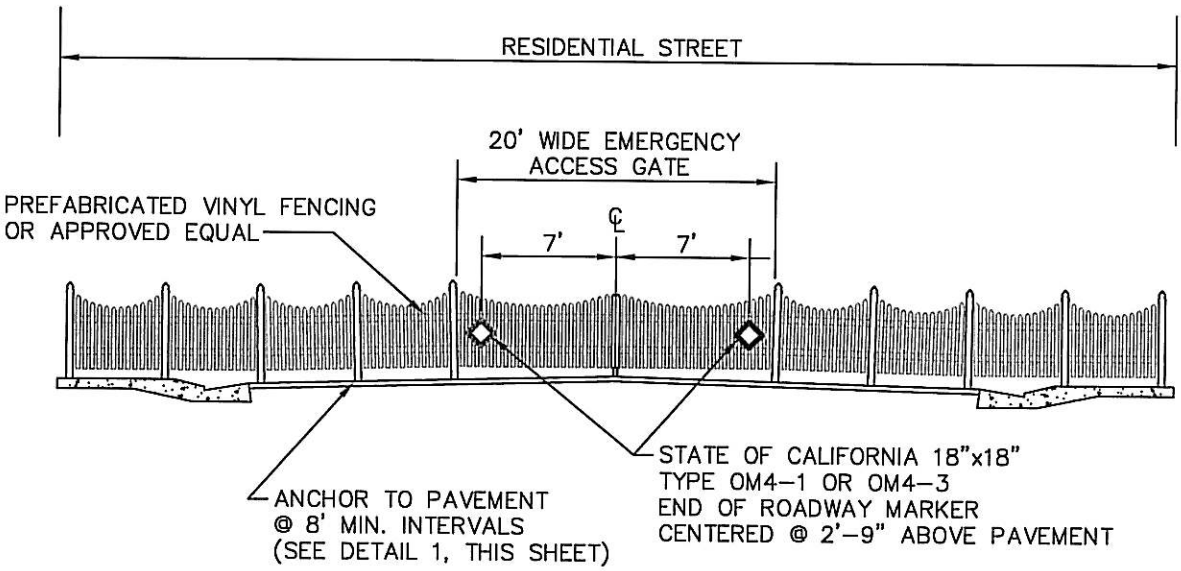


NOTES

1. Fencing in the Public right-of-way shall be white and reflectorized so as to be visible under normal atmospheric conditions from a minimum distance of 1,000 feet when illuminated by the low beams of standard automobile headlights.
2. Fencing shall have an average height of four (4) feet above pavement and shall contain a 20 foot wide openable gate in the roadway for emergency vehicle access.
3. Post base shall conform to Detail 1 or approved equal, and shall be secured to the asphalt pavement using ½" x 3" long lag shield driven flush with pavement and ½" x 3" galvanized lag bolts, four per base.
4. Prior to installation, an encroachment permit shall be obtained from the City of Manteca Public Works Department.

| NO. | REVISED | BY | MODEL HOME FENCING IN SUBDIVISION STREET | APPROVED BY: Mark Houghton DIRECTOR OF PUBLIC WORKS |
|---|---|---|---|---|
| | | | | |
| DRAWN BY: | J. ROSS | | | |
| CHECKED BY: | F. CLARK | | CITY OF MANTECA DEPARTMENT OF PUBLIC WORKS | DRAWING NO. ST-42 |
| SCALE: | NOT TO SCALE | | | DATE: APR. 2008 |